moveeo

evolving every day

Hubs & Spindles

Product Range and Components

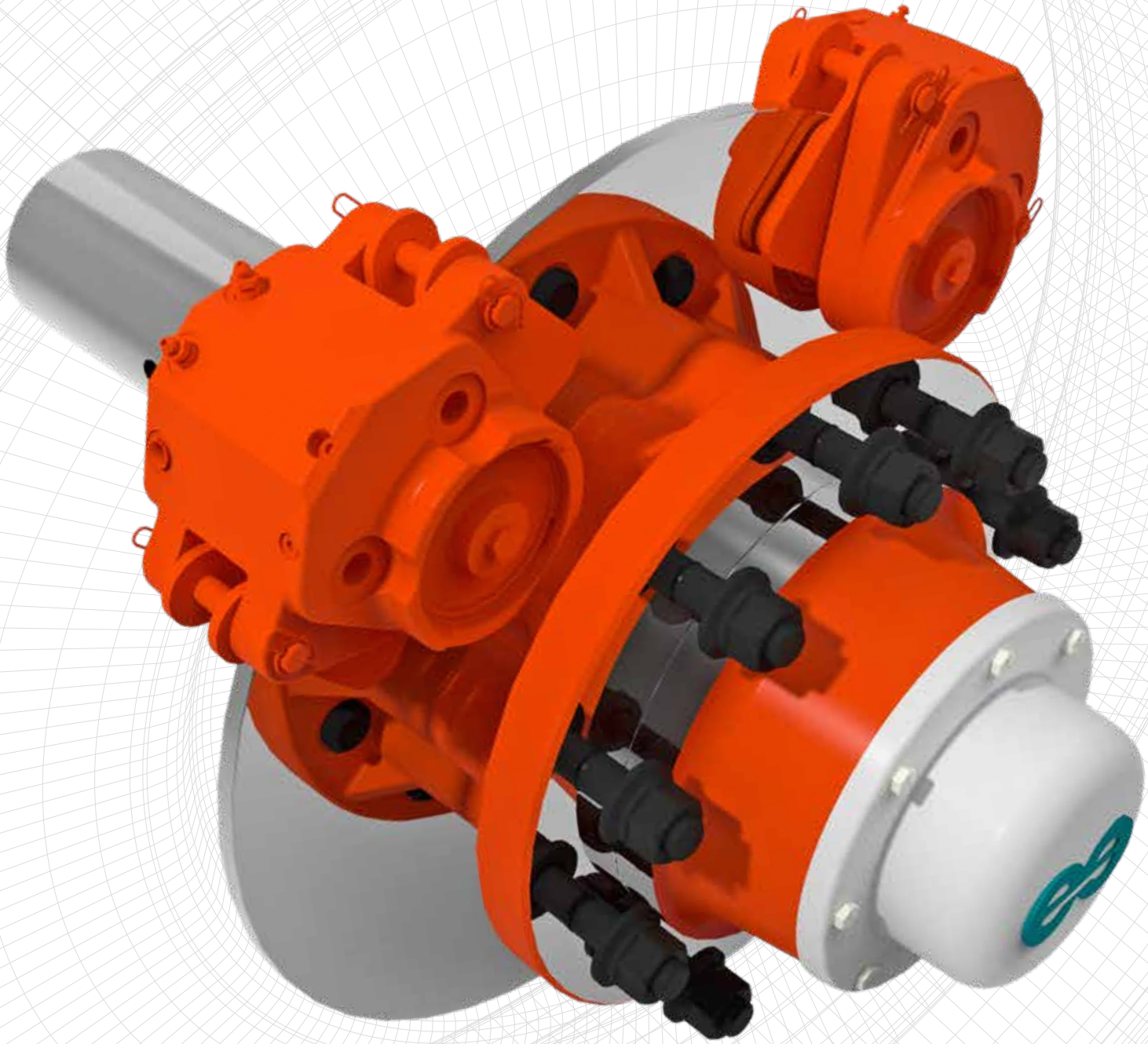

moveero

Hubs & Spindles

4 The markets we serve

Hubs & Spindles

8 Product and services
9 Profi-Hub
10 Product design and testing
12 Load ratings and capacities
13 Positive and negative offsets

Product Range

14 Profi-Hub 286 – 10 Bolt
15 Profi-Hub 335 – 10 Bolt
16 Hubs & Spindles – 4 Bolt
18 Hubs & Spindles – 5 Bolt
22 Hubs & Spindles – 6 Bolt
34 Hubs & Spindles – 8 Bolt
44 Hubs & Spindles – 10 Bolt
50 Hubs & Spindles – 20 Bolt
52 Straddle Hubs & Spindles– 4, 5 & 8 Bolt
55 Coulter Hubs & Spindles– 4 Bolt
59 Recreational Vehicles Hubs & Spindles– 4, 5 & 6 Bolt

Components

64 Hub Caps
66 Bearing Cups
68 Bearing Cones
70 Seals
72 Wear Sleeves
73 Cotter Pins
74 Wheel Bolts
75 Stud Bolts
76 Hex Bolts
77 Spindle Nuts
78 Wheel Nuts
80 Spindle Washers
82 Lock Washers
82 Grease Fittings

83 Warranty

moveero
Reliably and safely servicing the world's off-highway industries.

moveero is a world leading manufacturer of off-highway Wheels, Hubs & Spindles.

With a history that dates back to 1908, we are proud of our heritage and continue to have the drive and determination to maintain our leading position in the markets we operate in.

Building on these core foundations with our valued customers we look to use our experience, expertise and knowledge to create opportunities in our existing and future markets.

Agriculture

We work in partnership with leading OEMs to develop and supply wheels that meet the needs of this constantly evolving market. Extensive R&D ensures that our solutions are efficient, safe and enable increased productivity of machinery.

Agricultural Wheels for:

- Tractors and combines – diameters from 15" to 54" and widths from 6" to 30".
- Towed agricultural implements – diameters from 15" to 42" and widths from 7" to 28"
- Irrigation wheels are available in diameters from 24" to 38" and widths from 8" to 15".

Bringing innovation to the agricultural market with new product solutions is a commitment moveero has made to the industry.

Profi-Fit

- Easy tire fitting
- Reduced weight
- Durable
- Patented product

Profi-Grip

- Eliminates slippage
- Tires protected
- Feature TW profile
- Patented product

Profi-Line+

- Trailed & load bearing wheels
- Extended fatigue life x 5
- Patented product

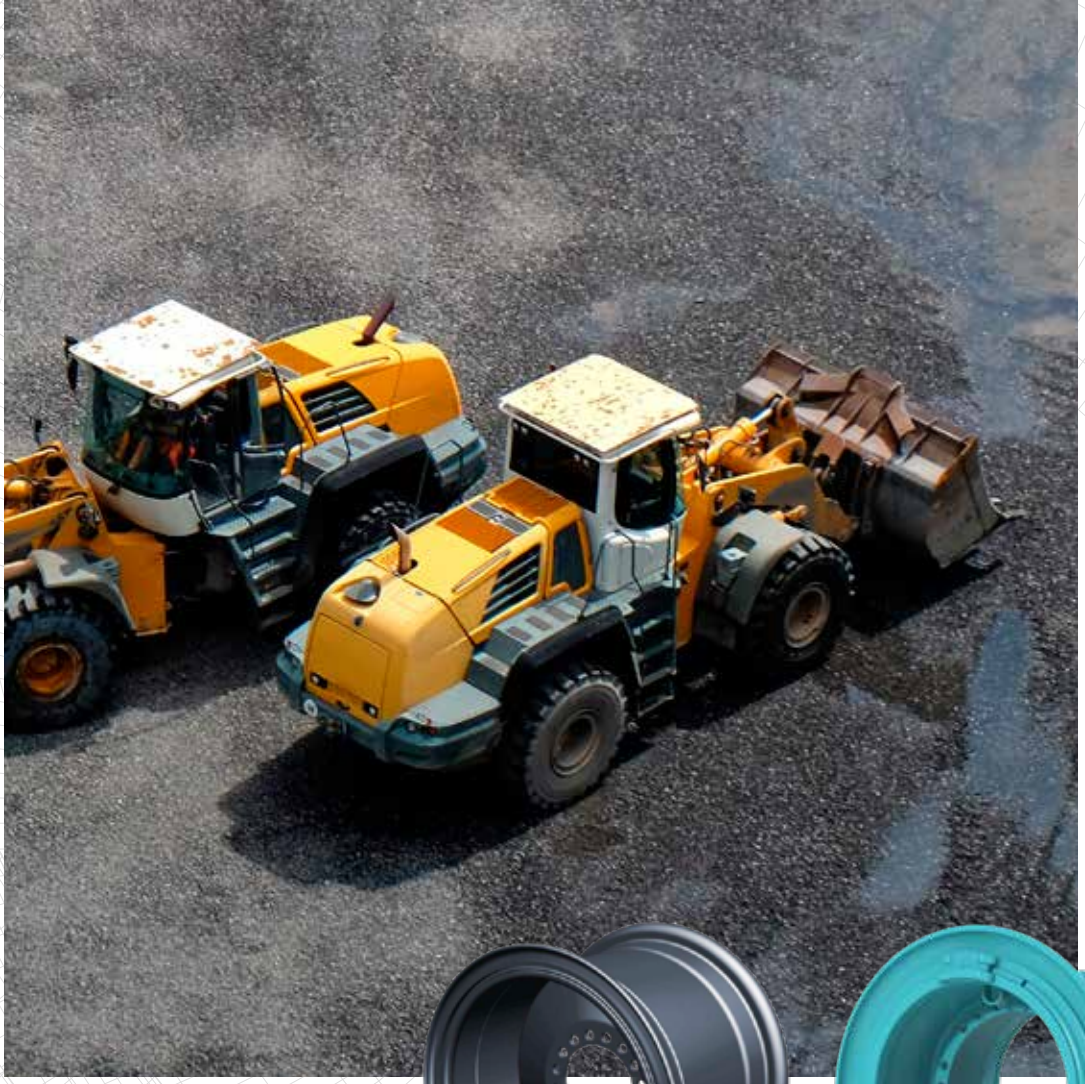

Our product portfolio has been developed to meet each industry's demands for safety, productivity, higher payloads and efficiency, together with driver safety and comfort, machine uptime and low maintenance. Our engineers work closely with operators to understand the challenges they face, enabling us to develop expertly-engineered solutions to meet their environmental, load and torque requirements.

Light construction

With a leading reputation for the design of 3 and 5 piece wheels, our products have excellent strength properties providing reliable performance, fatigue resistance at high loads, at speeds to withstand extreme site conditions, for OEMs and associated aftermarket customers worldwide.

The product range includes diameters from 12" to 35" and widths from 5" to 36", designed for backhoe loaders, skid steer loaders, small wheel loaders and telehandlers.

Heavy construction and mining

Designed to meet the demands for safety and productivity without compromising payload or efficiency.

Available in Diameters 20 – 35" and width 8.5 – 36", for wheel loaders, articulated dump trucks, motor graders and a range of wheels suitable for both underground and open mining, available in diameters up to 35" and widths up to 36".

Industrial and material handling

A leading supplier of wheels to the container-handling sector, moveero has been supplying container-handling equipment manufacturers, operators and ports worldwide for more than 30 years. Recognized for the quality, reliability and performance, we enable the smooth flow of materials for standard and heavy duty specialized vehicles.

Standard products are available in diameters from 8" to 33" and widths from 4.5" to 25".

With new ranges offering increased vehicle stability, durability and extended rim life with tire protection, contact us for further information about our material handling product range.

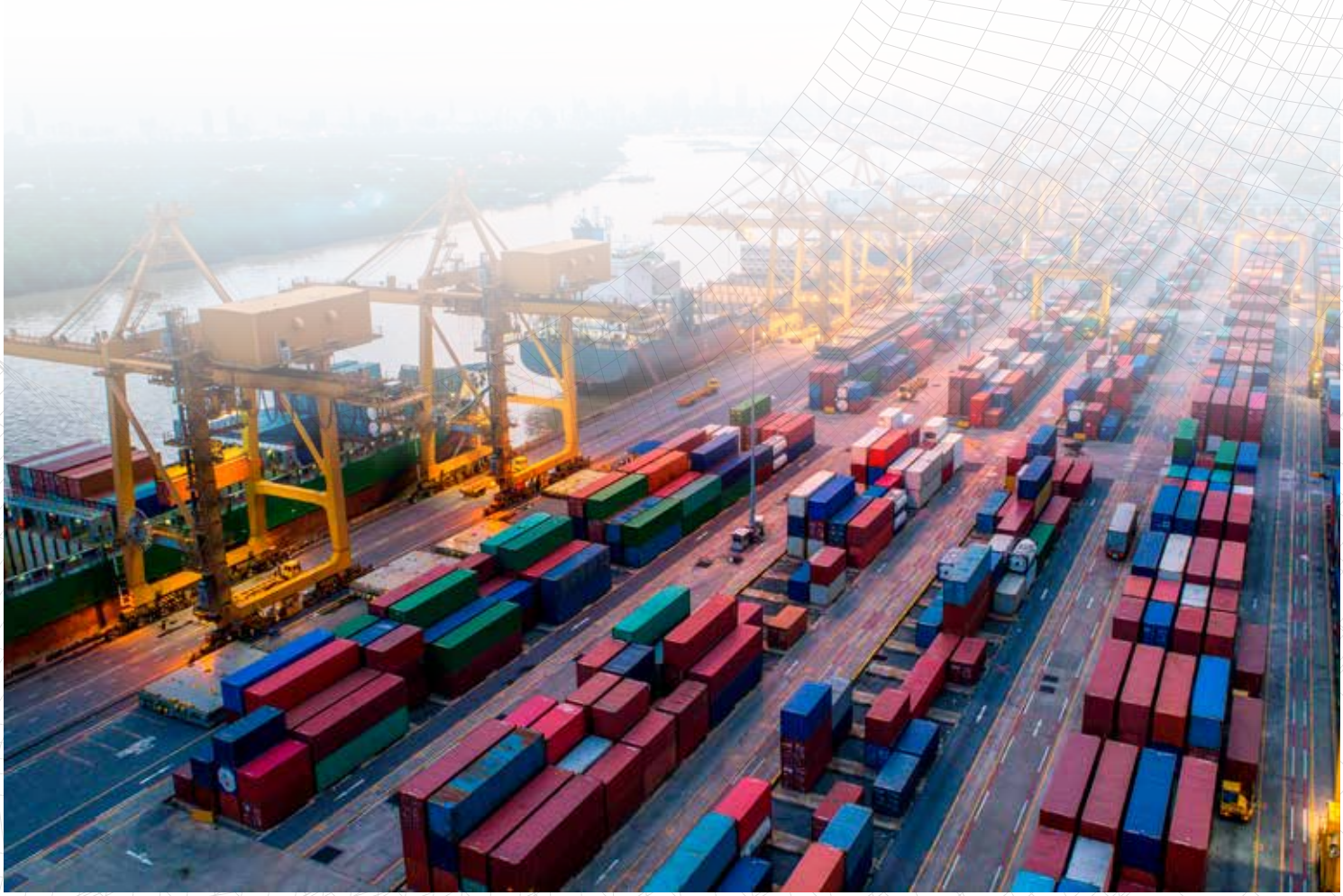

Forestry

Forestry machinery operate in challenging terrain and require traction and stability to accommodate high loads. Our range includes complete solutions for forestry customers, combining robust designs with in-field and in-house testing to provide products that are not only safe and sustainable, but also offer increased productivity.

Standard product range includes diameters from 22.5" to 32" and widths from 20" to 27".

As a leading manufacturer of hubs and spindles, we supply our Hub Systems range to all major manufacturers and OEMs across North America and Europe. We work closely with customers to develop hubs that enhance performance by offering innovative, bespoke solutions.

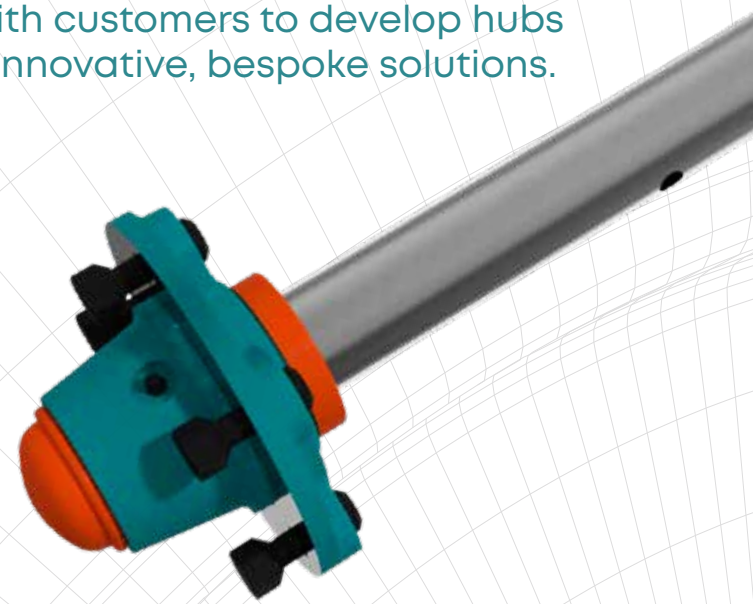

Quality product and service

With a commitment to high quality manufacturing processes and finishes, we supply premium products that are custom-engineered to suit our customers' specific applications, even in the most demanding and challenging environments. Our collaborative approach, working with customers, means that our hubs and spindles are focused on problem-solving to provide solutions that maximize productivity and up-time. We constantly work to design and test products to match the latest equipment trends, including higher payload, increased speed, lower vehicle weight and higher technical specification.

We manufacture a range of customizable hub systems for off-highway machinery, with capacities ranging from 500 lbs (227 kg) to 57,000 lbs (25,855 kg). The largest in the range is ideal for single-axle vehicles carrying out heavy duty applications, such as grain carts, slurry wagons and towed scrapers. The hub can be fully customized, with an option to include disc brake components if required.

Bent and straight spindles can be fully customized to specified dimensions. Cultivation; Straddle and standard designs are available with a range of bolt configurations. Our hubs are all sold complete with bearings, seals, hub caps and nuts and can be supplied machined and cupped only or in assembled and greased hub and spindle units.

Profi-**Hub**

moveero

The patented Profi-Hub Series has been designed to reflect the demands of modern machines, and sets a new standard in global off-highway engineering, providing manufacturers of the largest trailers and machines with an unbeatable assurance of reliability and strength.

Revolutionizing the design – Profi-Hub

moveero's innovative Profi-Hub is the perfect solution for today's machinery demands.

Designed by our experienced engineers, the new Profi-Hub series combines increased carrying capacity, with improved servicing and performance.

moveero's known hub range – the 871 and 873 – have been re-designed to reflect today's more demanding market requirements and offer improved features and capabilities with much greater value to customers.

Profi-Hub provides increased carrying capacity (loads up to 15,700 lbs), improved bearing performance and improved servicing, with the hub's recessed grease fitting reducing the risk of damage whilst in use and its press-on style hub cap simplifying serviceability.

The Profi-Hub range offers three areas of improvement.

1. Increased carrying capacity

- Capable of load requirements up to 15,700 lbs.
- Casting weight has been reduced by 15 lbs.
- As a result carbon footprint has improved by 30 lbs of CO_2 per hub.

2. Improved bearing performance

- The re-designed hub has been tested to demonstrate a remarkable 2.5x bearing improvement, with a design patent registered on the new shaped hub.

3. Improved servicing

- The recessed grease fitting reduces the risk of damage while in use.
- A press-on style hub cap simplifies the serviceability. A simple pry tool is all that is required to remove the cap.

Our hub manufacturing facility and customer service support team are located in Armstrong, Iowa, ensuring that all products are manufactured to the highest standard and value, while providing accurate and timely customer order status.

Assemblies can be delivered in a wide range of configurations to maximize installation efficiencies.

Product range and capacities

- 4 Bolt through 20 Bolt+ Bolt patterns (4, 5, 6, 8, 10 and 20 patterns).
- Traditional weight capacities range from 500 lbs to 50,000 lbs.
- Sold in a variety of configurations including machined hub, hub with cups installed, and complete hub and spindle assemblies:
  - With or without spindles.
  - With or without brake rotor mounting pads.
  - With studs, some with threaded holes for wheel mounting.
  - With bolt patterns and sizes which can be customized to meet the application and customer's requirements.

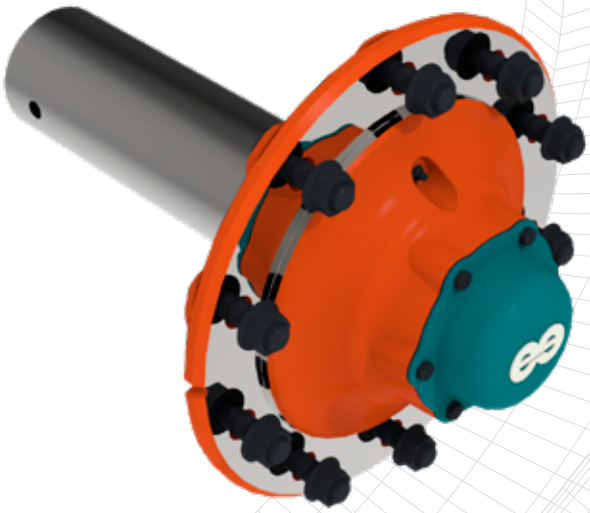

Product design

With extensive product research and development capabilities, we are committed to continuous product improvement and the delivery of innovative solutions to meet the changing needs of our customer and the market.

Our R&D team work closely with OEMs to develop hubs that enhance performance, with each new product designed to meet the specific requirements of the customer and application, providing strength and durability without adding unnecessary weight. This assists in minimizing fuel consumption, whilst maximizing payloads.

Before any product design is undertaken, we commission a thorough and comprehensive study of customer and machine requirements, with initial designs being based on extensive knowledge of existing products and their applications.

Advanced analytical models are created to enable us to develop high quality solutions in the virtual world, before committing to the manufacture of any parts. Finite Element Analysis (FEA) and Fatigue Analysis, supported by a comprehensive material database, are used to develop efficient products and systems that will meet specified performance and durability requirements.

Testing

Supporting our market leadership in the design, development and manufacture of off-highway wheels and hubs, we have a fully equipped wheel and hub test facility for customers across North America and further afield.

The facility includes a dedicated hub test stand which is capable of operating our largest capacity hub, enabling engineers to carry out dynamic cornering fatigue testing of the hub and spindle assembly. By controlling the test load, spindle length, and test speed (to replicate the maximum bearing loads of the system under the most extreme conditions), we can test high-capacity agricultural and construction hubs at the test centre, virtually eliminating the need for expensive and time-consuming field testing.

By undertaking testing in this real-world environment, both wheel and hub testing are carried out to simulate virtually any operating conditions, providing accurate performance data which is not only invaluable to customers, but also inputs into manufacturing, development and investment plans. The ability to apply loads up to 100,000 lbs, makes this the largest known hub testing machine in the world, enabling our engineers to develop larger hubs more quickly and more efficiently to meet our customers' needs.

moveero is one of the few organizations with the total engineering capability to offer design, simulation and validation and continue to make significant investments in both laboratory and field testing equipment. We have some of the most advanced purpose built, electronically controlled systems in the industry, including:

- FEA modelling and simulations
- Field testing and data acquisition
- Life expectancy/fatigue analysis

Our comprehensive facilities and approach result in:

- Products with reduced weight and enhanced durability
- Reduced lead time from design to production
- Reduced likelihood of early system problems
- Improved product reliability and dependability
- Enhanced total system performance
- Cost-effective design
- Global offering

Custom solutions

On occasions, OEMs may require customized solutions to match specific, and often highly challenging, conditions. In such circumstances we work closely with the customer's design teams and the tire manufacturers to provide these customized solutions, enabling the OEM to accurately match wheel designs to the equipment requirements, region and operating conditions.

We are able to provide support to customers from concept, through design, analysis and testing – employing our versatile production and engineering facilities to design, manufacture and test these customized designs.

Working with customer's design engineers in a collaborative way, we provide customers with a technical resource that includes design, engineering validation and product testing.

Load ratings and capacities

Hub capacities in this catalog are based on 20,000 mile B10 bearing life at normal tractor speeds up to 20 MPH and 14,000 PSI maximum fibre stress on the spindle in the bearing and seal area.

The use of these products for other than free rolling applications, such as drive wheels, tandem axles, hillside operations, and rough terrain, will reduce the stated capacities. The capacities assume normal tire inflation pressures and do not indicate tire capacity.

The actual capacity may vary from the stated capacity due to the conditions of service, so the manufacturer must test its equipment under the most severe conditions to determine that the proper component selection has been made.

The service application graph is a general guide showing the reduction in capacity for the various hub packages when service conditions are severe.

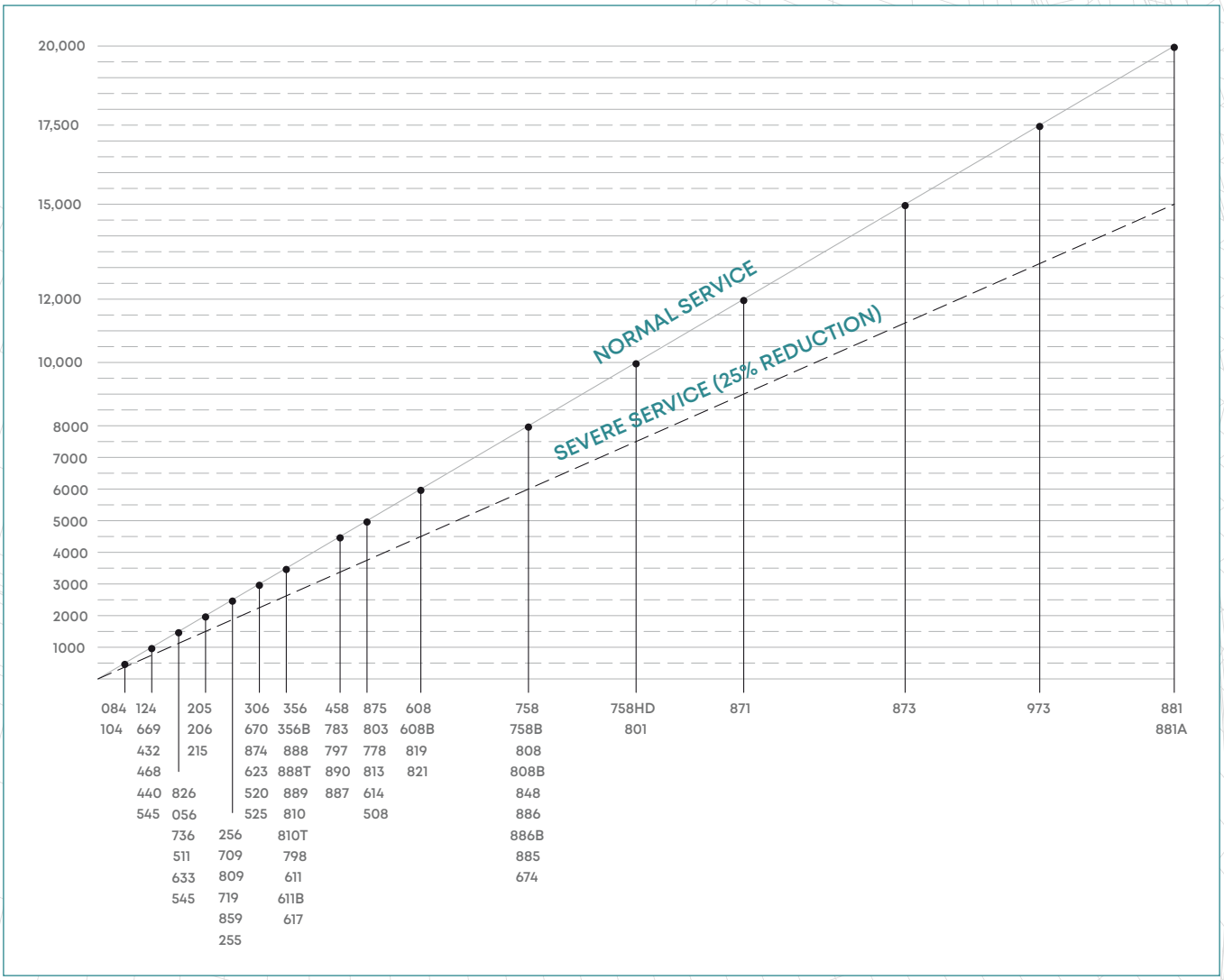

For additional service information, please contact moveero customer service.

What is an offset?

The difference between the rim centerline and the vertical mounting face of the disc.

Negative offset (outset)

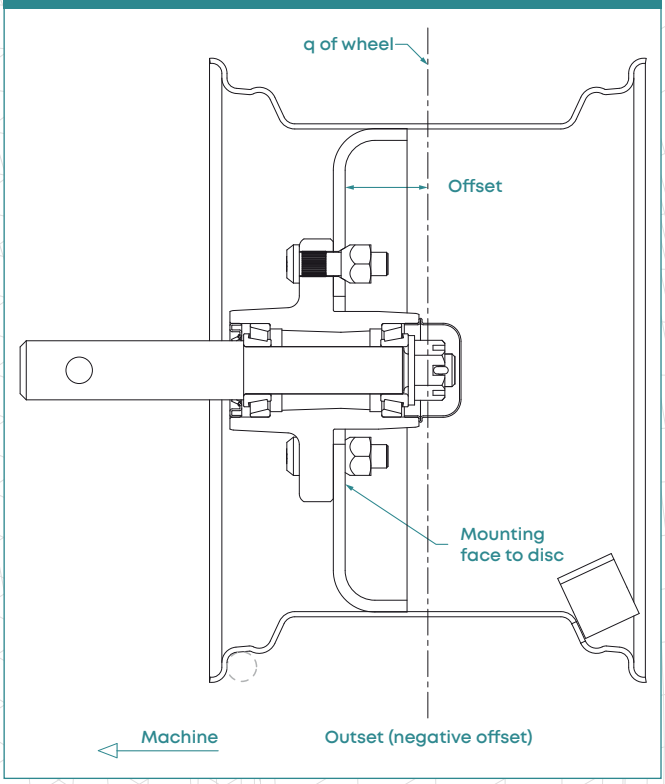

Negative offset is the distance between the mounting face of the disc and the rim centerline. This distance is termed negative when the mounting face is **in-board** of the rim centerline.

Positive offset (inset)

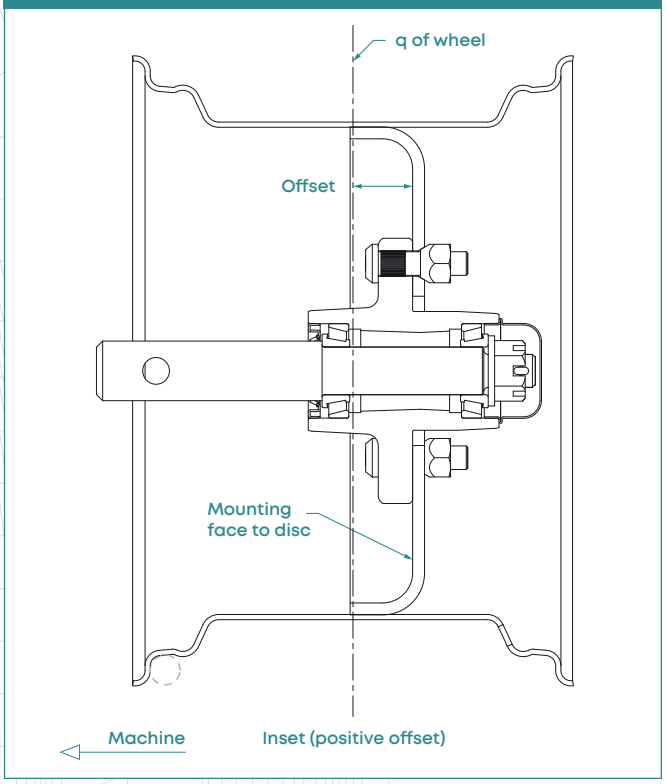

Positive offset is the distance between the mounting face of the disc and the rim centerline. This distance is termed positive when the mounting is **out-board** of the rim centerline.

Profi-Hub 286
10 Bolt / 11.25" Bolt circle / 8.66" [220 mm] Pilot

169A 176A

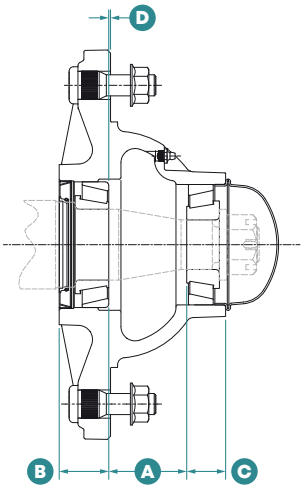

169B 176B

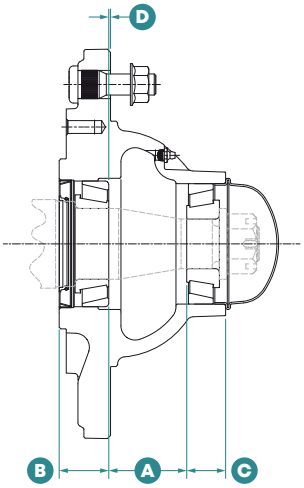

Profi-Hub 286 – Technical Information

MODEL NO.	CAPACITY LBS	HUB ASSY	HUB SUB ASSY	INNER CUP	OUTER CUP	INNER CONE	BORE DIA. (IN)	OUTER CONE	BORE DIA. (IN)	HUB CAP	STUD BOLT	NUT	SEAL	A (IN)	B (IN)	C (IN)	D (IN)
169A	12,800	169A286-2001	169A286-3001	39520 P702319	453A P702329	39585 P752439	2.50	460 P752437	1.75	P502118	P151409	P201612	CR30087 P602128	2.81	1.75	1.31	0.06
169B	12,800	169B286-2001	169B286-3001	39520 P702319	453A P702329	39585 P752439	2.50	460 P752437	1.75	P502118	P151409	P201612	CR30087 P602128	2.81	1.75	1.31	0.06
176A	15,700	176A286-2001	176A286-3001	33462 P702323	453A P702329	33275 P752434	2.75	460 P752437	1.75	P502118	P151409	P201612	CR33772 P602127	2.81	1.69	1.31	0.06
176B	15,700	176B286-2001	176B286-3001	33462 P702323	453A P702329	33275 P752434	2.75	460 P752437	1.75	P502118	P151409	P201612	CR33772 P602127	2.81	1.69	1.31	0.06

- 169A & 176A are non-brake version hubs.
- 169B & 176B are brake version hubs. Hubs are machined to have 6X 1/2-20 UNF bolt holes on an 8.25" brake pattern.
- All hubs are based on 0 offset.
- All hubs are equipped with a grease fitting.
- All hubs are available in grease or oil bath designs.
- All designs are compatible with previous models 871, 871B, 873, and 873B.
- Hubs are made from Gray Iron Castings.

Profi-Hub 335
10 Bolt / 13.188" Bolt circle/ 11.05"

193A

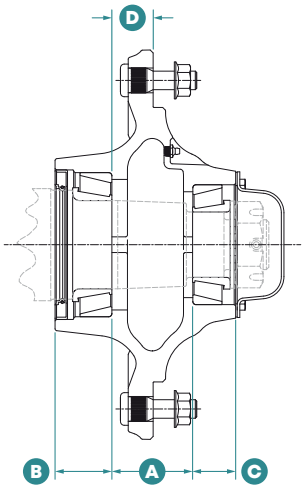

193B

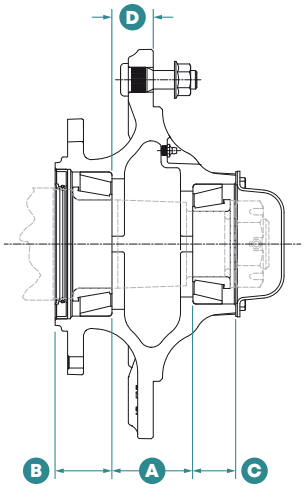

Profi-Hub 335 – Technical Information

MODEL NO.	CAPACITY LBS	HUB ASSY	HUB SUB ASSY	INNER CUP	OUTER CUP	INNER CONE	BORE DIA. (IN)	OUTER CONE	BORE DIA. (IN)	HUB CAP	STUD BOLT	NUT	SEAL	A (IN)	B (IN)	C (IN)	D (IN)
193A	25,400 LBS	193A335-2001	193A335-3001	HM218210 P702330	HM212011 P702290	HM218248 P752406	3.54	HM212049 P752428	2.62	P502142	P151409	P201630	CR43771 P602126	3.25	2.28	1.72	1.66
193B	25,400 LBS	193B335-2001	193B335-3001	HM218210 P702330	HM212011 P702290	HM218248 P752406	3.54	HM212049 P752428	2.62	P502142	P151409	P201630	CR43771 P602126	3.25	2.28	1.72	1.66

- 193A is a non-brake version hub.
- 193B is a brake version hubs. Hubs are machined to have 10X 1/2-20 UNF bolt holes on a 9.50" brake pattern.
- All hubs are based on 1.5" positive offset.
- All hubs are equipped with a grease fitting.
- All hubs are available in grease or oil bath designs.
- All designs are compatable with previous models 881, 981, 891, and 991.
- Hubs are made from high grade ductile iron.

4 bolt / 5" bolt circle / 3.62" pilot

104

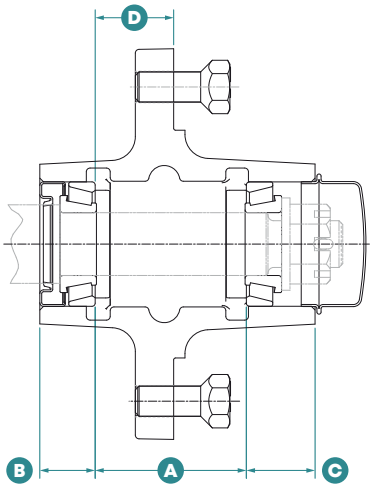

633

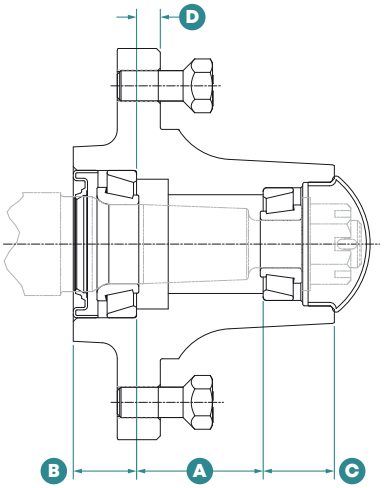

Hub – Technical Information

MODEL NO.	CAP (LBS)	HUB ASSY.	HUB SUB ASSY.	INNER CUP	OUTER CUP	INNER CONE	BORE DIA. (IN)	OUTER CONE	BORE DIA. (IN)	HUB CAP	BOLT	SEAL	A (IN)	B (IN)	C (IN)	D (IN)
104	1000	L104200	L104300	L44610 P702215	L44610 P702215	L44643 P752316	1.00	L44643 P752316	1.00	P502010	P101301	CR12411 P602123	2.406	0.875	1.094	1.250
633	1500	L633200	L633300	LM67010 P702203	LM11910 P702210	LM67048 P752311	1.25	LM11949 P752305	0.75	P502003	P101301	CR14975 P602149	2.00	1.00	1.12	0.38
124	1250	L124200	L124300	LM67010 P702203	LM11910 P702210	LM67048 P752311	1.25	LM11949 P752305	0.75	P502051	P101301	CR16069 P602105	1.16	0.94	0.96	0.38
669	1250	L669202	L699302	LM67010 P702203	LM11910 P702210	LM67048 P752311	1.25	LM11949 P752305	0.75	P502051	P101301	CR14974 P602111	1.16	0.97	0.88	0.37

Hub capacity based on .38" negative offset
For alternate 4 bolt Straddle, Coulter and Recreational vehicle hubs please refer to page 52-62.

4 bolt / 5" bolt circle / 3.62" pilot

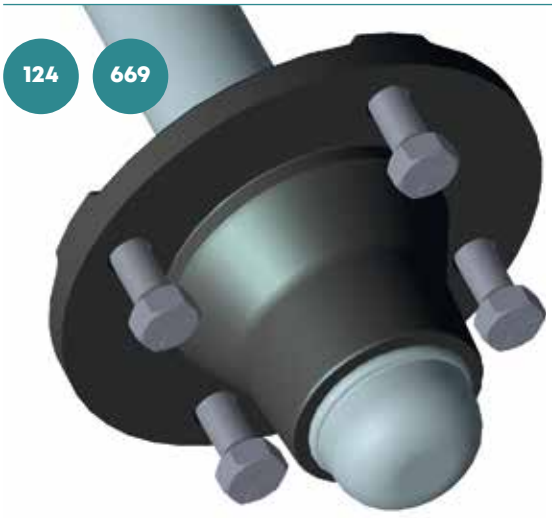

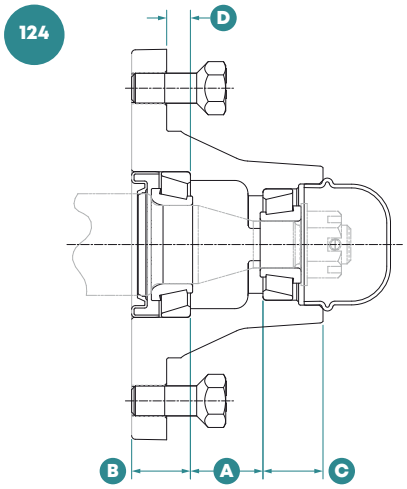

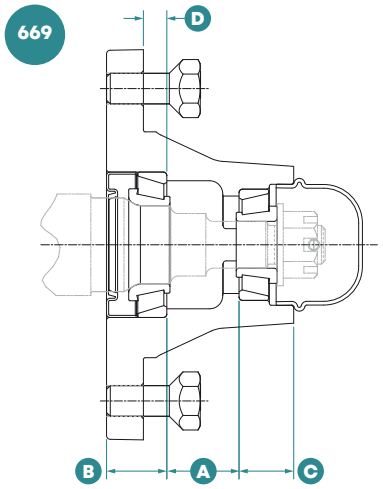

Spindle – Technical Information

SPINDLE STYLE	MODEL NO.	MATERIAL	MATERIAL DIA. (IN)	SPINDLE ASSY.	MACHINED SPINDLE	WASHER	SLOTTED NUT	COTTER PIN	OVERALL LENGTH (IN)	THREAD (IN)	SEAL DIA. (IN)
STRAIGHT	104	CDS	1-1/4	LS8163	LS9163	P301802	P251703	P401901	8-1/2	3/4-16	1-1/4
STRAIGHT	633	CDS	1-5/8	LS5101	LS7101	P301802	P251703	P401905	9-5/16	3/4-16	1-1/2
STRAIGHT	124	CDS	1-5/8	LS5110	LS7110	P301801	P251701	P401905	10	5/8- 18	1-5/8
STRAIGHT	669	CDS	1-5/8	LS5106	LS7106	P301801	P251701	P401905	10	5/8- 18	1-1/2

Spindles

- Straight spindles are standard
- Special spindles along with bent and double end spindles will be manufactured to customer specifications. Bent spindles are not available for spindles larger than 2-3/4"
- Please contact your sales person with your requirements

5 bolt / 5.50" bolt circle / 4" pilot

205

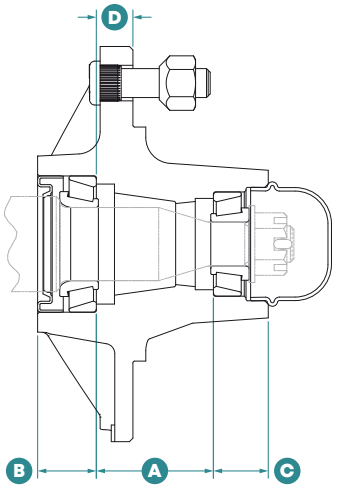

255

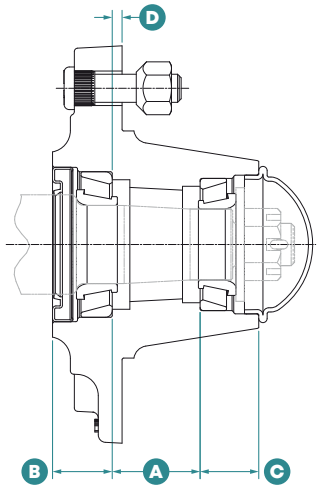

Hub – Technical Information

MODEL NO.	CAP (LBS)	HUB ASSY.	HUB SUB ASSY.	INNER CUP	OUTER CUP	INNER CONE	BORE DIA. (IN)	OUTER CONE	BORE DIA. (IN)	HUB CAP	WHEEL BOLT	STUD	NUT	SEAL	A (IN)	B (IN)	C (IN)	D (IN)
205	2000	L205200	L205300	LM67010 P702203	LM11910 P702210	P752311 LM67048	1.25	LM11949 P752305	0.75	P502051	–	P151401	P201602	CT16069 P602105	2.00	1.00	0.94	0.63
255	2500	L255200	L255300	LM48510 P702207	LM67010 P702203	LM48548 P752310	1.38	LM67048 P752311	1.25	P502026	–	P151401	P201602	CR17617 P602106	1.55	1.05	1.03	0.17
511	1800	L511200	L511300	LM67010 P702203	LM11910 P702210	LM67048 P752311	1.25	LM11949 P752305	0.75	P502051	P101301	–	–	CR14675 P602149	2.00	1.00	0.94	0.63
623	3180	L623200	L623300	24780 P702266	15245 P702229	24780 P752366	1.63	15123 P752363	1.25	P502026	–	P151422	P201638	CR21208 P602139	2.91	1.44	0.84	0.69

205, 255 and 511 hub capacity based on .25" negative offset
623 hub conforms to Government Standard Specifications MIL-W-8005
For alternate 5 bolt Straddle, Coulter and Recreational vehicle hubs please refer to page 52-62.

5 bolt / 5.50" bolt circle / 4" pilot

511

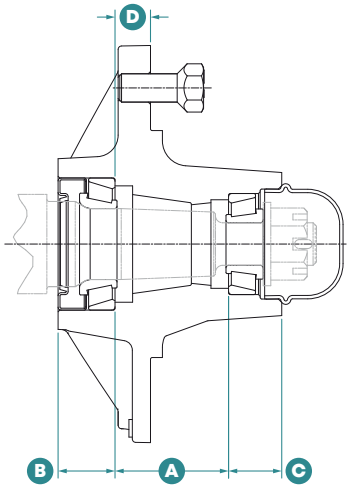

623

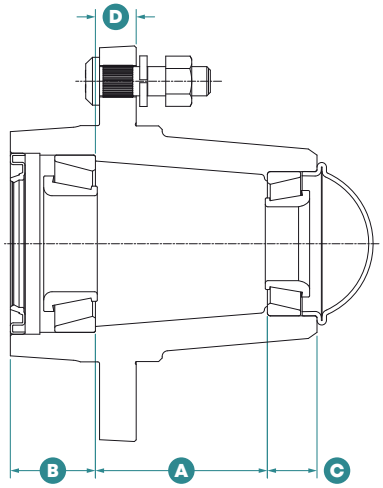

Spindle – Technical Information

SPINDLE STYLE	MODEL NO.	MATERIAL	MATERIAL DIA. (IN)	SPINDLE ASSY.	MACHINED SPINDLE	WASHER	SLOTTED NUT	COTTER PIN	OVERALL LENGTH (IN)	THREAD (IN)	SEAL DIA. (IN)
STRAIGHT	205	CDS	1-5/8	LS5114	LS7114	P301801	P251701	P401905	10	5/8 -18	1-5/8
STRAIGHT	255	CDS	1-3/4	LS5111	LS7111	P301803	P251703	P401905	12-5/16	3/4 -16	1-3/4
STRAIGHT	511	CDS	1-5/8	LS5151	LS7151	P301802	P251703	P401905	10-3/8	3/4 -16	1-1/2
STRAIGHT	623	NO STANDARD SPINDLE AVAILABLE. CONTACT MOVEERO CUSTOMER SERVICE.									

Spindles

- Straight spindles are standard
- Special spindles along with bent and double end spindles will be manufactured to customer specifications. Bent spindles are not available for spindles larger than 2-3/4"
- Please contact your sales person with your requirements

5 bolt / 5.50" bolt circle / 4" pilot

736

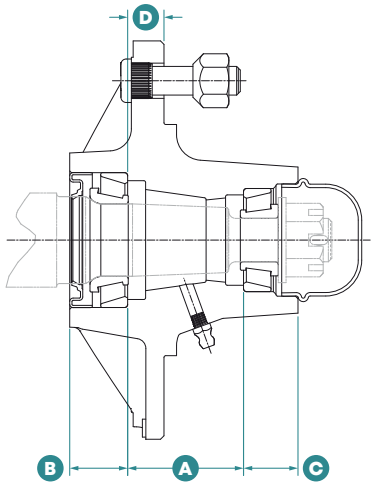

056

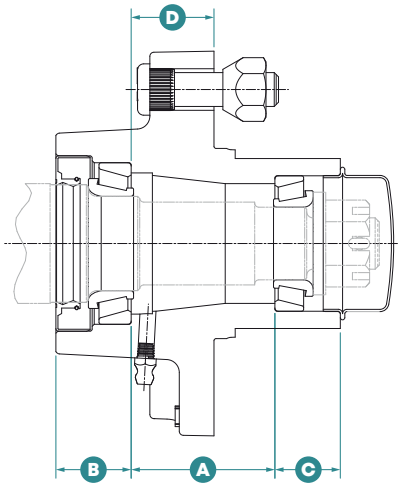

Hub – Technical Information

MODEL NO.	CAP (LBS)	HUB ASSY.	HUB SUB ASSY.	INNER CUP	OUTER CUP	INNER CONE	BORE DIA. (IN)	OUTER CONE	BORE DIA. (IN)	HUB CAP	STUD	NUT	SEAL	WEAR SLEEVE	A (IN)	B (IN)	C (IN)	D (IN)
736	1650	L736200	L736300	LM67010 P702203	LM11910 P702210	LM67048 P752311	1.25	LM11949 P752305	0.75	P502051	P151401	P201602	CR14975 P602149	–	2.00	1.00	0.94	0.62
056	1750	L056200	L056300	L68111 P702214	L44610 P702302	L68149 P752315	1.38	L44649 P752314	1.06	P502010	P151401	P201603	CR17144 P602117	–	2.10	1.10	0.95	1.21
719	2760	L719200	L719300	LM48510 P702207	LM67010 P702203	LM48548 P752310	1.38	LM67048 P752311	1.25	P502026	P151401	P201602	CR15190 P602102	–	1.56	1.00	1.06	0.22
859*	2760	L859200	L859300	LM48510 P702207	LM67010 P702203	LM48548 P752310	1.38	P752311 LM67048	1.25	P502026	P151401	P201602	P602118 CR15174	P912901	1.56	1.25	1.06	0.22

736, 719 and 859 hub capacity based on .25" negative offset
056 hub capacity based on 0 offset
*Wear sleeve installed for triple lip seal
For alternate 5 bolt Straddle, Coulter and Recreational vehicle hubs please refer to page 52-62.

5 bolt / 5.50" bolt circle / 4" pilot

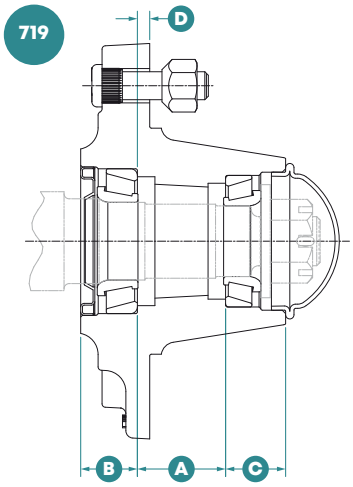

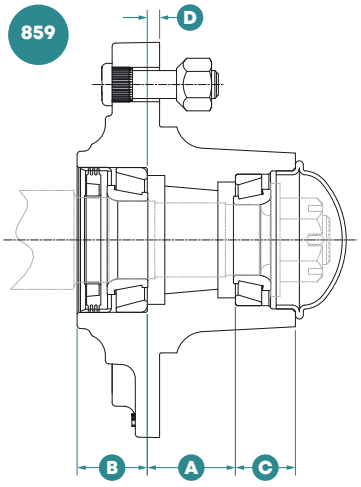

Spindle – Technical Information

SPINDLE STYLE	MODEL NO.	MATERIAL	MATERIAL DIA. (IN)	SPINDLE ASSY.	MACHINED SPINDLE	WASHER	SLOTTED NUT	COTTER PIN	OVERALL LENGTH (IN)	THREAD (IN)	SEAL DIA. (IN)
STRAIGHT	736	CDS	1-5/8	LS5101	LS9144	P301802	P251703	P401905	10-3/8	3/4 -16	1-1/2
STRAIGHT	056	CDS	1-3/4	LS5303	LS7303	P301807	P251703	P401901	8-1/2	3/4 -16	1.719
STRAIGHT	719	CDS	1-3/4	LS8130	LS9130	P301804	P251721	P401901	11-1/2	7/8-14	1-1/2
STRAIGHT	859	CDS	1-3/4	LS8130	LS9130	P301804	P251721	P401901	11-1/2	7/8-14	1-1/2

Spindles

- Straight spindles are standard
- Special spindles along with bent and double end spindles will be manufactured to customer specifications. Bent spindles are not available for spindles larger than 2-3/4"
- Please contact your sales person with your requirements

6 bolt / 6" bolt circle / 4.62" pilot

826

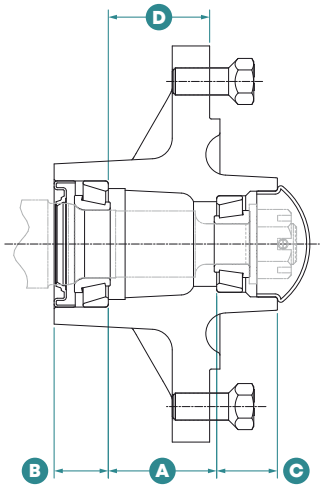

874

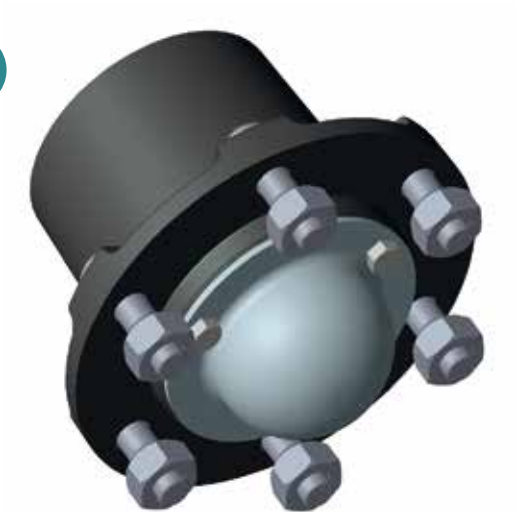

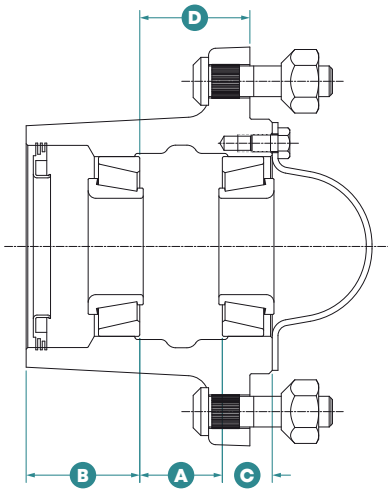

Hub – Technical Information

MODEL NO.	CAP (LBS)	HUB ASSY.	HUB SUB ASSY.	INNER CUP	OUTER CUP	INNER CONE	BORE DIA. (IN)	OUTER CONE	BORE DIA. (IN)	HUB CAP	WHEEL BOLT	STUD	NUT	SEAL	WEAR SLEEVE	A (IN)	B (IN)	C (IN)	D (IN)
826	1650	L826200	L826300	LM67010 P702203	LM11910 P702210	LM67048 P752311	1.25	LM11949 P752305	0.75	P502003	P101301	–	–	P602165	–	2.00	1.00	1.12	1.88
874	3050	L874200	L874300	25520 P702201	25520 P702201	25580 P752405	1.75	25580 P752405	1.75	P502083	–	P151432	P201604	CR25078 P602132	–	1.50	2.06	0.81	2.00
709	2760	L709200	L709300	LM48510 P702207	LM67010 P702203	LM48548 P752310	1.38	LM67048 P752311	1.25	P502026	P101301	–	–	CR15190 P602102	–	1.56	1.00	1.06	1.59
809	2760	L809200	L809300	LM48510 P702207	LM67010 P702203	LM48548 P752310	1.38	LM67048 P752311	1.25	P502026	P101301	–	–	CR15174 P602118	P912901	1.56	1.19	1.06	1.59

Hub capacity based on 1.12" positive offset
For alternate 6 bolt Straddle, Coulter and Recreational vehicle hubs please refer to page 53-62.

6 bolt / 6" bolt circle / 4.62" pilot

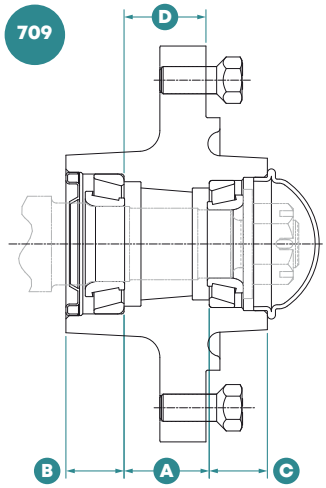

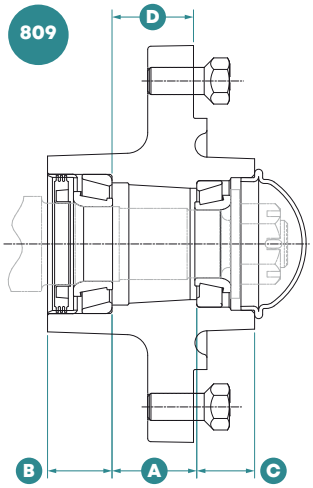

Spindle – Technical Information

SPINDLE STYLE	MODEL NO.	MATERIAL	MATERIAL DIA. (IN)	SPINDLE ASSY.	MACHINED SPINDLE	WASHER	SLOTTED NUT	COTTER PIN	OVERALL LENGTH (IN)	THREAD (IN)	SEAL DIA. (IN)
STRAIGHT	826	CDS	1-5/8	LS8124	LS9124	P301802	P251703	P401905	10	3/4 -16	1-1/2
STRAIGHT	874	NO STANDARD SPINDLE AVAILABLE. CONTACT MOVEERO CUSTOMER SERVICE.									
STRAIGHT	709	CDS	1-3/4	LS8130	LS9130	P301804	P251721	P401901	11-1/2	7/8 -14	1-1/2
STRAIGHT	809	CDS	1-3/4	LS8130	LS9130	P301804	P251721	P401901	11-1/2	7/8 -14	1-1/2

Spindles

- Straight spindles are standard
- Special spindles along with bent and double end spindles will be manufactured to customer specifications. Bent spindles are not available for spindles larger than 2-3/4"
- Please contact your sales person with your requirements

6 bolt / 6" bolt circle / 4.62" pilot

888 888T

888

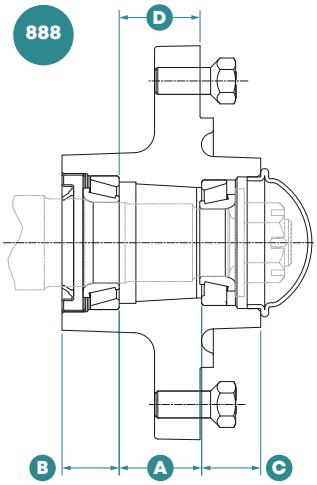

888T

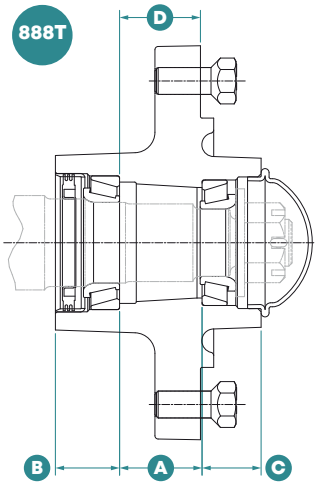

889

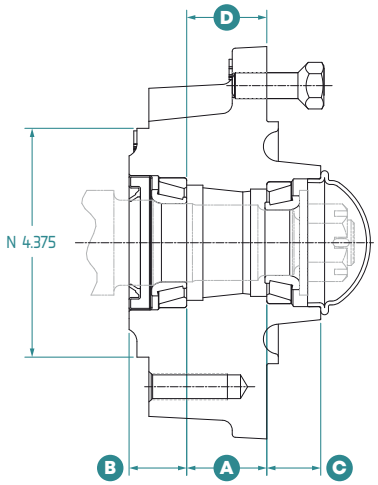

Hub – Technical Information

MODEL NO.	CAP (LBS)	HUB ASSY.	HUB SUB ASSY.	INNER CUP	OUTER CUP	INNER CONE	BORE DIA. (IN)	OUTER CONE	BORE DIA. (IN)	HUB CAP	WHEEL BOLT	SEAL	WEAR SLEEVE	A (IN)	B (IN)	C (IN)	D (IN)
888	3560	L888252	L888300	JL69310 P702206	LM67010 P702203	JL69349 P752301	1.50	LM67048 P752311	1.25	P502026	P101301	CR16289 P602103	–	1.53	1.28	1.19	1.50
888T	3560	L888202	L888302	JL69310 P702206	LM67010 P702203	JL69349 P752301	1.50	LM67048 P752311	1.25	P502026	P101301	CR16286 P602107	P912901	1.53	1.09	1.00	1.53
889	3560	L889201	L889301	JL69310 P702206	LM67010 P702203	JL69349 P752301	1.50	LM67048 P752311	1.25	P502026	P101325	CR16289 P602103	–	1.53	1.09	1.00	1.53
810	3560	L810201	L810301	LM29710 P702315	LM67010 P702203	LM29749 P752313	1.50	LM67048 P752311	1.25	P502026	P101308	CR16289 P602103	–	1.56	1.00	1.06	1.50
810T	3560	L810202	L810302	LM29710 P702315	LM67010 P702203	LM29749 P752313	1.50	LM67048 P752311	1.25	P502026	P101308	CR16286 P602107	P912901	1.56	1.00	1.06	1.50
798	3560	L798200	L798300	LM29710 P702315	LM67010 P702203	LM29749 P752313	1.50	LM67048 P752311	1.25	P502026	P101308	CR16289 P602103	–	1.56	1.00	1.06	1.59

Hub capacity based on 1.12" positive offset
T = Additional version that utilizes a triple lip seal

6 bolt / 6" bolt circle / 4.62" pilot

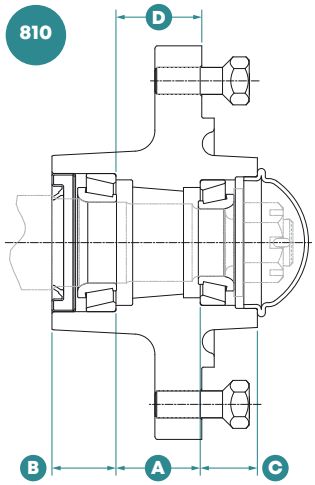

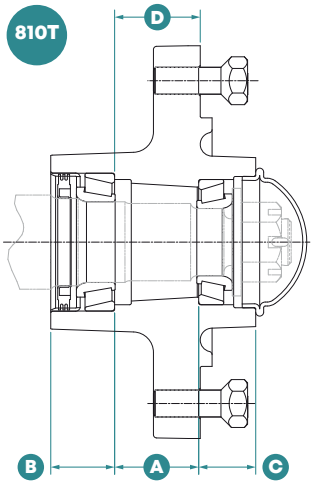

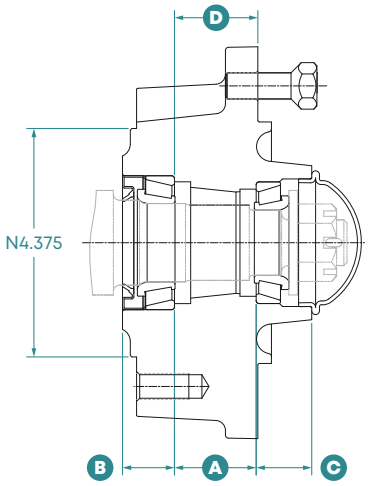

Spindle – Technical Information

SPINDLE STYLE	MODEL NO.	MATERIAL	MATERIAL DIA. (IN)	SPINDLE ASSY.	MACHINED SPINDLE	WASHER	SLOTTED NUT	COTTER PIN	OVERALL LENGTH (IN)	THREAD (IN)	SEAL DIA. (IN)
STRAIGHT	888	CDS	1-3/4	LS8131	LS9131	P301804	P251721	P401901	12-1/2	7/8-14	1-5/8
STRAIGHT	888T	CDS	1-3/4	LS8131	LS9131	P301804	P251721	P401901	12-1/2	7/8-14	1-5/8
STRAIGHT	889	CDS	2	LS8133	LS9133	P301804	P251721	P401901	14	7/8-14	1-5/8
STRAIGHT	810	CDS	1-3/4	LS8072	LS9072	P301804	P251721	P401901	12-1/2	7/8-14	1-5/8
STRAIGHT	810T	CDS	1-3/4	LS8072	LS9072	P301804	P251721	P401901	12-1/2	7/8-14	1-5/8
STRAIGHT	798	CDS	2	LS5309	LS7309	P301804	P251721	P401901	12-3/16	7/8-14	1-5/8

Spindles

- Straight spindles are standard
- Special spindles along with bent and double end spindles will be manufactured to customer specifications. Bent spindles are not available for spindles larger than 2-3/4"
- Please contact your sales person with your requirements

6 bolt / 6" bolt circle / 4.62" pilot

783

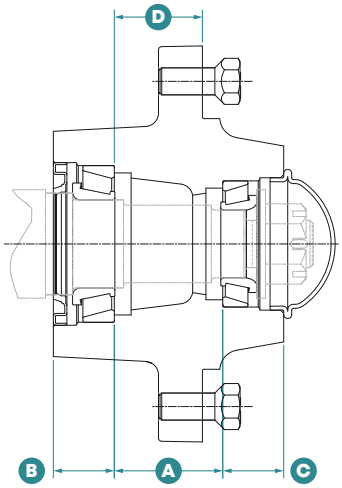

797

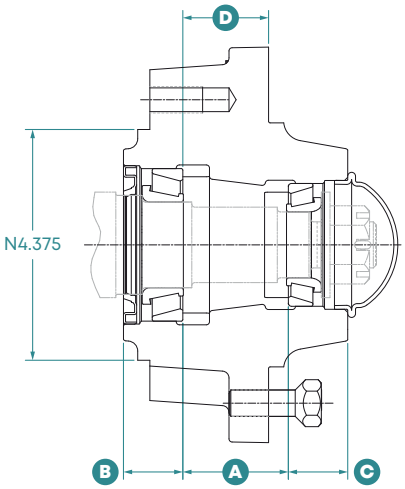

Hub – Technical Information

MODEL NO.	CAP (LBS)	HUB ASSY.	HUB SUB ASSY.	INNER CUP	OUTER CUP	INNER CONE	BORE DIA. (IN)	OUTER CONE	BORE DIA. (IN)	HUB CAP	WHEEL BOLT	STUD	NUT	SEAL	A (IN)	B (IN)	C (IN)	D (IN)
783	4570	L783200	L783300	LM501310 P702204	LM67010 P702203	LM501349 P752306	1.62	LM67048 P752311	1.25	P502026	P101301	–	–	CR18823 P602109	2.00	1.13	1.13	1.62
797	4570	L797200	L797300	LM501310 P702204	LM67010 P702203	LM501349 P752306	1.62	LM67048 P752311	1.25	P502026	P101301	–	–	CR18823 P602109	2.00	1.13	1.13	1.62
890	4570	L890200	L890300	LM501310 P702204	LM67010 P702203	LM501349 P752306	1.62	LM67048 P752311	1.25	P502026	–	P151401	P201602	CR18823 P602109	2.00	1.13	1.13	1.62
887	4570	L887200	L887300	LM501310 P702204	LM67010 P702203	LM501349 P752306	1.62	LM67048 P752311	1.25	P502026	–	P151401	P201602	CR18823 P602109	2.00	1.13	1.13	1.62

Hub capacity based on 1.12 positive offset

6 bolt / 6" bolt circle / 4.62" pilot

890

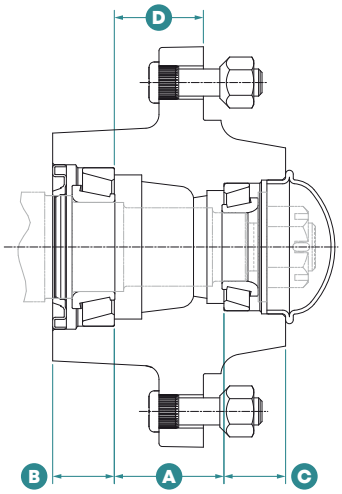

887

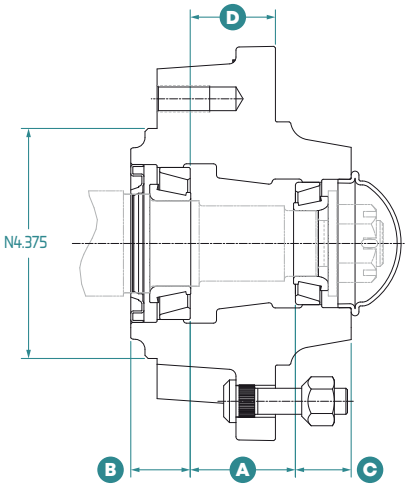

Spindle – Technical Information

SPINDLE STYLE	MODEL NO.	MATERIAL	MATERIAL DIA. (IN)	SPINDLE ASSY.	MACHINED SPINDLE	WASHER	SLOTTED NUT	COTTER PIN	OVERALL LENGTH (IN)	THREAD (IN)	SEAL DIA. (IN)
STRAIGHT	783	CDS	2	LS5135	LS7135	P301804	P251721	P401901	12.94	7/8-14	1-7/8
STRAIGHT	797	CDS	2	LS5135	LS7135	P301804	P251721	P401901	12.94	7/8-14	1-7/8
STRAIGHT	890	CDS	2	LS5135	LS7135	P301804	P251721	P401901	12.94	7/8-14	1-7/8
STRAIGHT	887	CDS	2	LS5135	LS7135	P301804	P251721	P401901	12.94	7/8-14	1-7/8

Spindles

- Straight spindles are standard
- Special spindles along with bent and double end spindles will be manufactured to customer specifications. Bent spindles are not available for spindles larger than 2-3/4"
- Please contact your sales person with your requirements

6 bolt / 6" bolt circle / 4.62" pilot

670

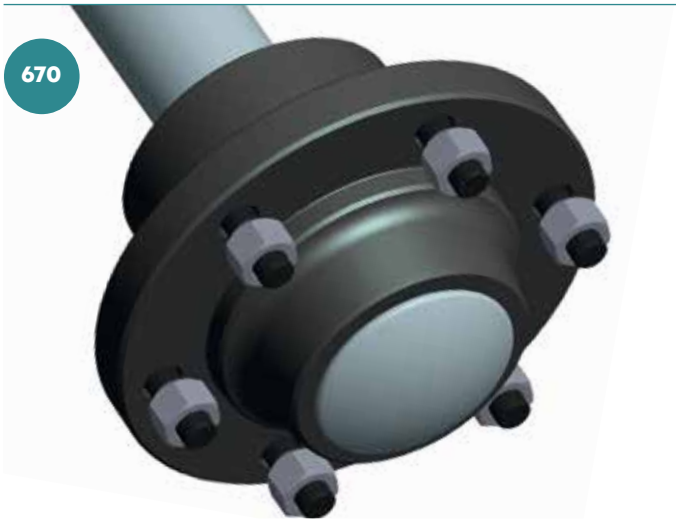

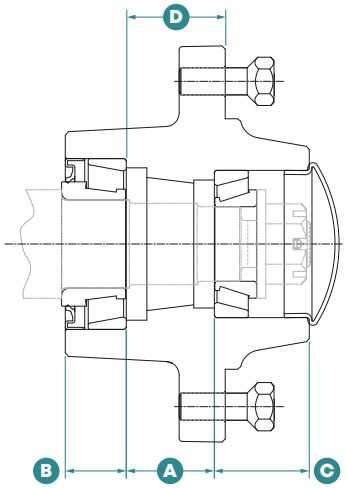

875

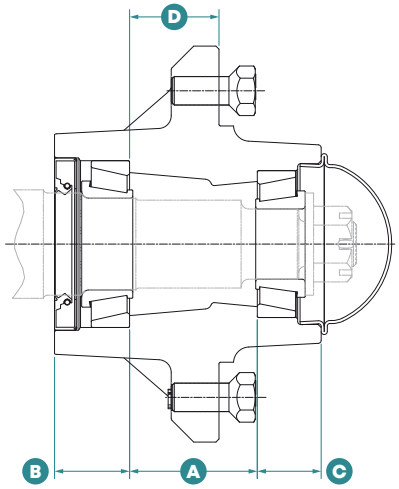

Hub – Technical Information

MODEL NO.	CAP (LBS)	HUB ASSY.	HUB SUB ASSY.	INNER CUP	OUTER CUP	INNER CONE	BORE DIA. (IN)	OUTER CONE	BORE DIA. (IN)	HUB CAP	WHEEL BOLT	STUD	NUT	SEAL	A (IN)	B (IN)	C (IN)	D (IN)
670	3230	L670200	L670300	332 P702272	14276 P702260	342A P752377	1.62	14137A P75236	1.38	P502048	P101308	–	–	CR22870 P602233	1.62	1.13	1.75	1.81
875	4910	L875200	L875300	25520 P702201	25821 P702205	25590 P752303	1.80	25877 P752308	1.38	P502001	P101303	–	–	CR20125 P602110	2.50	1.47	1.25	1.75
803	4910	L803200	L803300	25520 P702201	25821 P702205	25590 P752303	1.80	25877 P752308	1.38	P502001	P101303	–	–	CR20148 P602104	2.50	1.47	1.25	1.75
206	2000	L206200	L206300	LM67010 P702335	LM11910 P702246	LM67048 P752442	1.25	LM11949 P752345	0.75	P502051	–	P151449	P201602	CR16069 P602105	2.00	1.00	0.94	1.88

Hub capacity based on 1.12" positive offset

6 bolt / 6" bolt circle / 4.62" pilot

803

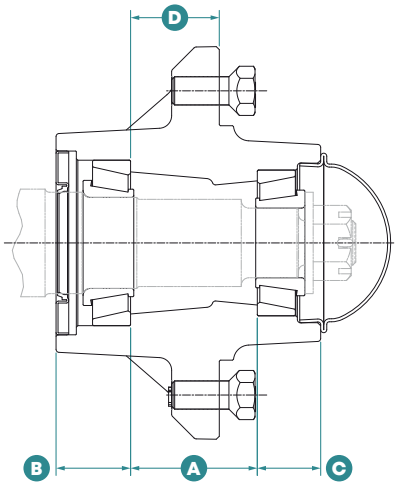

206

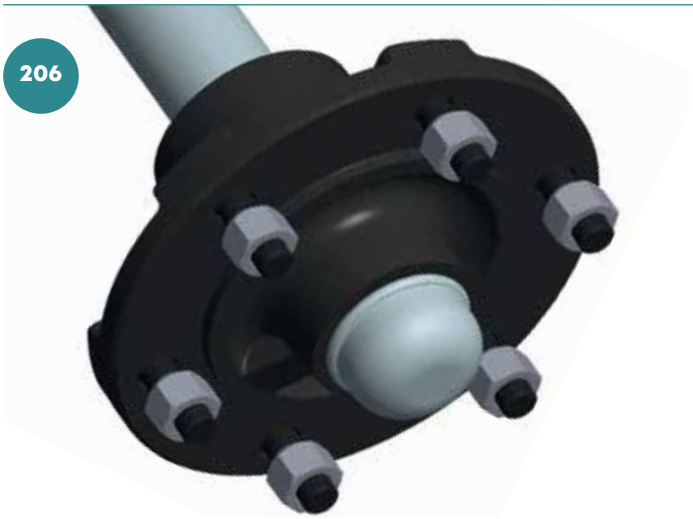

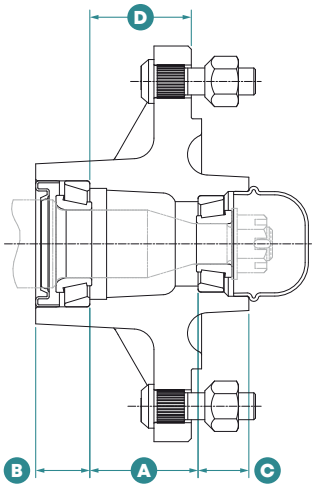

Spindle – Technical Information

SPINDLE STYLE	MODEL NO.	MATERIAL	MATERIAL DIA. (IN)	SPINDLE ASSY.	MACHINED SPINDLE	WASHER	SLOTTED NUT	COTTER PIN	OVERALL LENGTH (IN)	THREAD (IN)	SEAL DIA. (IN)
STRAIGHT	670	CDS	2	LS8111	LS9111	P301804	P251721	P401901	11-1/8	7/8-14	SEATS ON CONE
STRAIGHT	875	CDS	2-1/8	LS5105	LS7105	P301804	P251721	P401901	15-7/16	7/8-14	2
STRAIGHT	803	CDS	2-1/8	LS5105	LS7105	P301804	P251721	P401901	15-7/16	7/8-14	2
STRAIGHT	206	CDS	1-5/8	LS5114	LS7114	P301801	P251701	P401905	10	5/8 -18	1-5/8

Spindles

- Straight spindles are standard
- Special spindles along with bent and double end spindles will be manufactured to customer specifications. Bent spindles are not available for spindles larger than 2-3/4"
- Please contact your sales person with your requirements

6 bolt / 6" bolt circle / 4.62" pilot

256

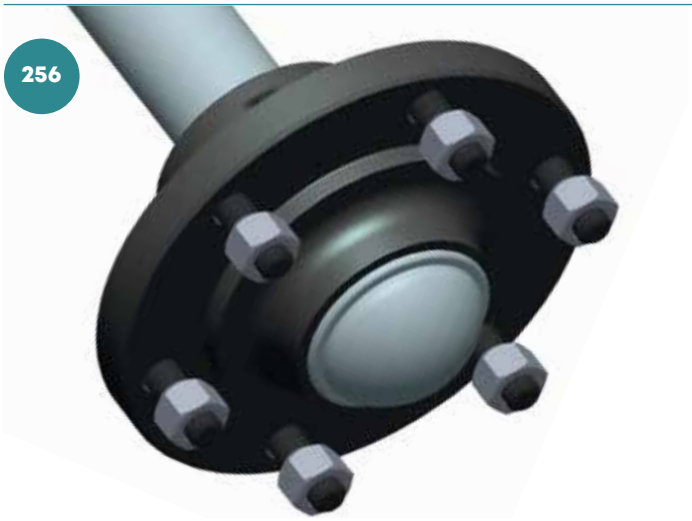

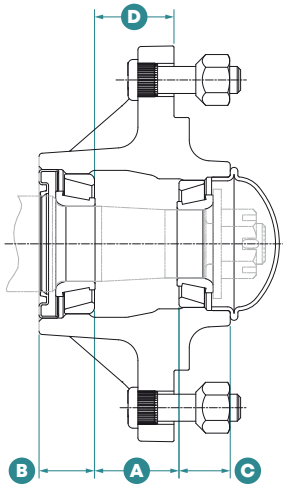

306

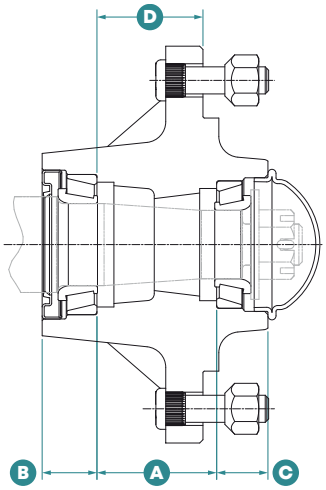

Hub – Technical Information

MODEL NO.	CAP (LBS)	HUB ASSY.	HUB SUB ASSY.	INNER CUP	OUTER CUP	INNER CONE	BORE DIA. (IN)	OUTER CONE	BORE DIA. (IN)	HUB CAP	WHEEL BOLT	STUD	NUT	SEAL	A (IN)	B (IN)	C (IN)	D (IN)
256	2500	L256200	L256300	LM48510 P702207	LM67010 P702203	LM48548 P752310	1.38	LM67048 P752311	1.25	P502026	–	P151421	P201602	CR17617 P602106	1.55	1.02	0.94	1.46
306	3000	L306200	L306300	LM29710 P702315	LM67010 P702203	LM29749 P752313	1.50	LM67048 P752311	1.25	P502026	–	P151401	P201602	CR17617 P602106	2.19	1.01	0.94	1.94
356	3500	L356200	L356300	LM501310 P702204	LM67010 P702203	LM501349 P752306	1.62	LM67048 P752311	1.25	P502026	P101303	–	–	CR20044 P602114	2.84	1.44	0.94	1.59
356B	3500	L356215	L356315	LM501310 P702204	LM67010 P702203	LM501349 P752306	1.62	LM67048 P752311	1.25	P502026	P101303	–	–	CR20044 P602114	2.84	1.44	0.94	1.59

Hub capacity based on 1.12" positive offset
B = Additional version that has brake mounting pattern
For alternate 6 bolt Straddle, Coulter and Recreational vehicle hubs please refer to page 53-62.

6 bolt / 6" bolt circle / 4.62" pilot

356

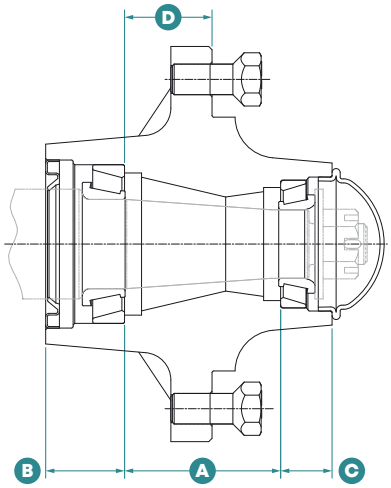

356B

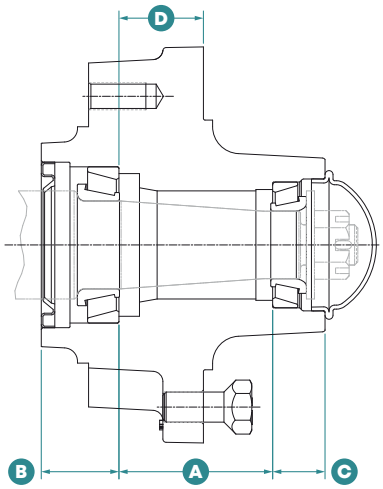

Spindle – Technical Information

SPINDLE STYLE	MODEL NO.	MATERIAL	MATERIAL DIA. (IN)	SPINDLE ASSY.	MACHINED SPINDLE	WASHER	SLOTTED NUT	COTTER PIN	OVERALL LENGTH (IN)	THREAD (IN)	SEAL DIA. (IN)
STRAIGHT	256	CDS	1-3/4	LS5111	LS7111	P301803	P251703	P401905	12-5/16	3/4 -16	1-3/4
STRAIGHT	306	CDS	1-3/4	LS5112	LS7112	P301803	P251703	P401905	12	3/4 -16	1-3/4
STRAIGHT	356	CDS	2	LS5113	LS7113	P301803	P251703	P401901	12	3/4 -16	2
STRAIGHT	356B	CDS	2	LS5113	LS7113	P301803	P251703	P401901	12	3/4 -16	2

Spindles

- Straight spindles are standard
- Special spindles along with bent and double end spindles will be manufactured to customer specifications. Bent spindles are not available for spindles larger than 2-3/4"
- Please contact your sales person with your requirements

6 bolt / 6" bolt circle / 4.62" pilot

611

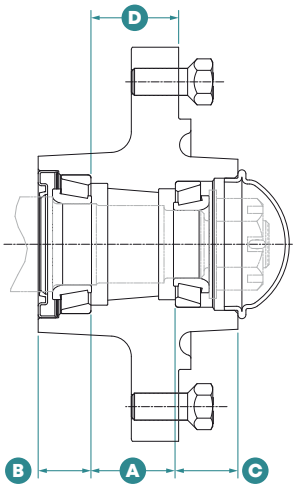

Hub – Technical Information

MODEL NO.	CAP (LBS)	HUB ASSY.	HUB SUB ASSY.	INNER CUP	OUTER CUP	INNER CONE	BORE DIA. (IN)	OUTER CONE	BORE DIA. (IN)	HUB CAP	WHEEL BOLT	SEAL	A (IN)	B (IN)	C (IN)	D (IN)
611	3600	L611200	L611300	LM29710 P702315	LM67010 P702203	LM29749 P752313	1.50	LM67048 P752311	1.25	P502026	P101301	CR17617 P602106	1.56	0.98	1.16	1.62
614	5000	L614200	L614300	LM603011 P702309	LM48510 P702308	LM603049 P752419	1.78	LM48548 P752353	1.38	P502004	P101303	CR20148	1.75	1.38	1.38	1.63

Hub capacity based on 1.12" positive offset
B = Additional version that has brake mounting pattern
For alternate 6 bolt Straddle, Coulter and Recreational vehicle hubs please refer to page 53-62.

6 bolt / 6" bolt circle / 4.62" pilot

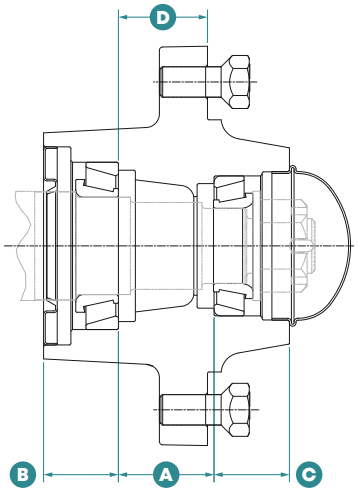

Spindle – Technical Information

SPINDLE STYLE	MODEL NO.	MATERIAL	MATERIAL DIA. (IN)	SPINDLE ASSY.	MACHINED SPINDLE	WASHER	SLOTTED NUT	COTTER PIN	OVERALL LENGTH (IN)	THREAD (IN)	SEAL DIA. (IN)
STRAIGHT	611	CDS	1-3/4	LS5142	LS7142	P301805	P251706	P401901	14	1-14	1-3/4
STRAIGHT	611B	CDS	1-3/4	LS5142	LS7142	P301805	P251706	P401901	14	1-14	1-3/4
STRAIGHT	614	CDS	2	LS5119	LS7119	P301805	P251706	P401901	18	1-14	1.947

Spindles

- Straight spindles are standard
- Special spindles along with bent and double end spindles will be manufactured to customer specifications. Bent spindles are not available for spindles larger than 2-3/4"
- Please contact your sales person with your requirements

8 bolt / 8" bolt circle / 6" pilot

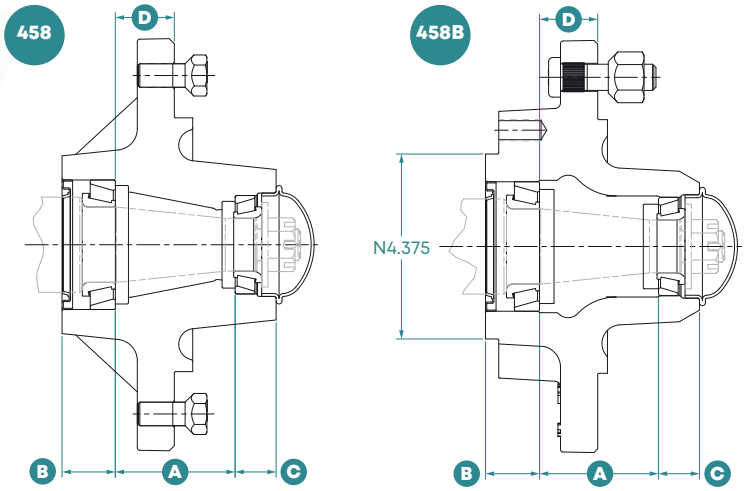

Hub – Technical Information

MODEL NO.	CAP (LBS)	HUB ASSY.	HUB SUB ASSY.	INNER CUP	OUTER CUP	INNER CONE	BORE DIA. (IN)	OUTER CONE	BORE DIA. (IN)	HUB CAP	WHEEL BOLT	STUD	NUT	SEAL	A (IN)	B (IN)	C (IN)	D (IN)
458	4500	L458200	L458300	LM603011 P702208	LM67010 P702203	LM603049 P752307	1.78	LM67048 P752311	1.25	P502026	P101303	–	–	CR22392 P602115	2.83	1.26	0.97	1.38
458B	4500	L458202	L458302	LM603011 P702208	LM67010 P702203	LM603049 P752307	1.78	LM67048 P752311	1.25	P502026	–	P151402	P201601	CR22392 P602115	2.83	1.26	0.97	1.38
508	5000	L508200	L508300	JLM104910 P702318	LM501310 P702204	JLM104948 P752445	1.97	LM501349 P752306	1.63	P502008	–	P151436	P201601	CR24904 P602195	2.71	1.21	1.37	1.42
508B	5000	L508203	L508303	JLM104910 P702318	LM501310 P702204	JLM104948 P752445	1.97	LM501349 P752306	1.63	P502008	–	P151436	P201601	CR24904 P602195	2.71	1.21	1.37	1.42

458 and 458B hub capacity based on 1.12" positive offset
508 and 508B hub capacity based on .38" positive offset
B = Additional version that has brake mounting pattern
For alternate 8 bolt Straddle please refer to page 52-54.

8 bolt / 8" bolt circle / 6" pilot

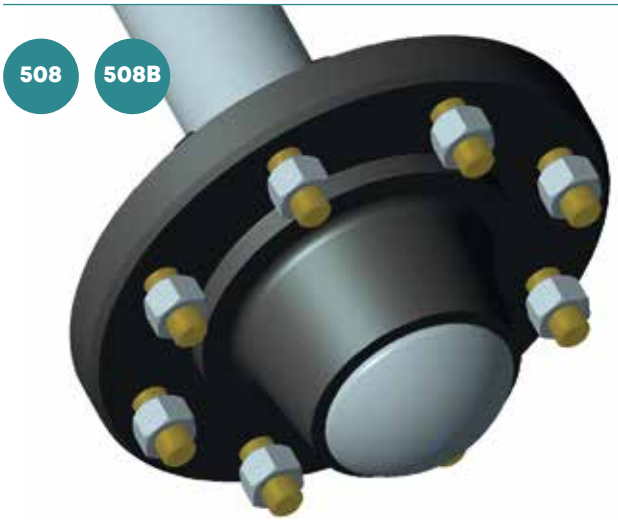

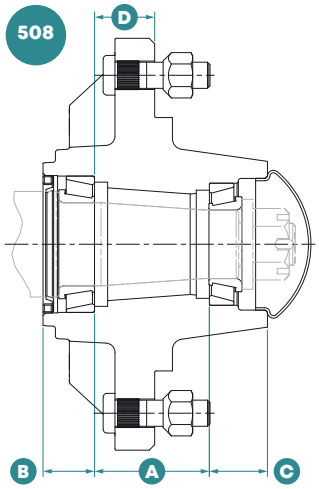

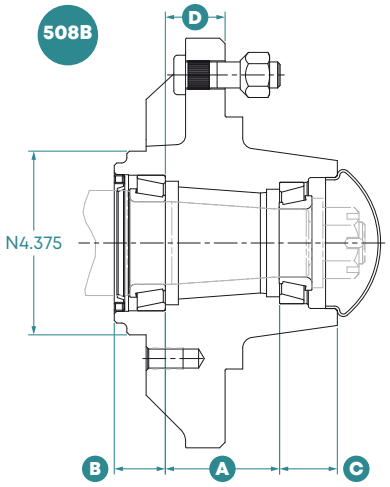

Spindle – Technical Information

SPINDLE STYLE	MODEL NO.	MATERIAL	MATERIAL DIA. (IN)	SPINDLE ASSY.	MACHINED SPINDLE	WASHER	SLOTTED NUT	COTTER PIN	OVERALL LENGTH (IN)	THREAD (IN)	SEAL DIA. (IN)
STRAIGHT	458	CDS	2-1/4	LS5115	LS7115	P301803	P251703	P401905	14	3/4-16	2-1/4
STRAIGHT	458B	CDS	2-1/4	LS5115	LS7115	P301803	P251703	P401905	14	3/4-16	2-1/4
STRAIGHT	508	CDS	2-1/2	LS8001	LS9001	P301830	P251706	P401910	12-1/2	1-14	2-1/2
STRAIGHT	508B	CDS	2-1/2	LS8001	LS9001	P301830	P251706	P401910	12-1/2	1-14	2-1/2

Spindles

- Straight spindles are standard
- Special spindles along with bent and double end spindles will be manufactured to customer specifications. Bent spindles are not available for spindles larger than 2-3/4"
- Please contact your sales person with your requirements

8 bolt / 8" bolt circle / 6" pilot

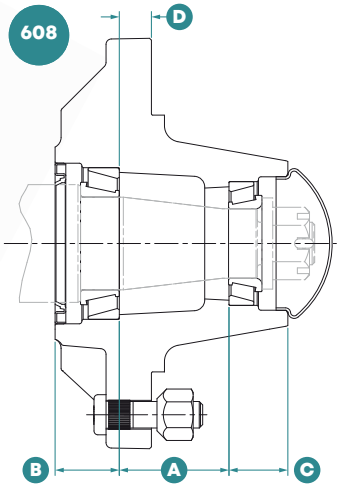

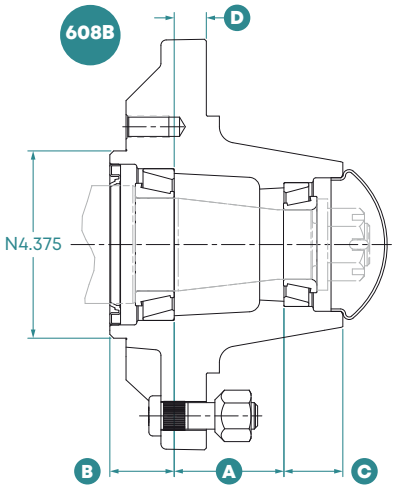

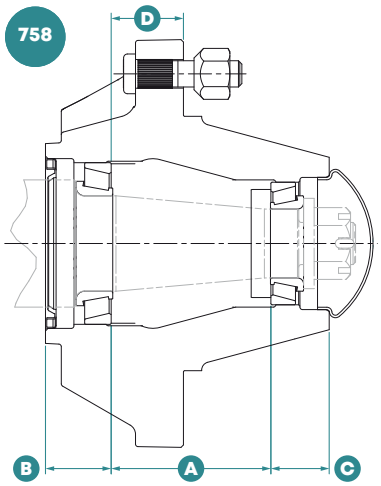

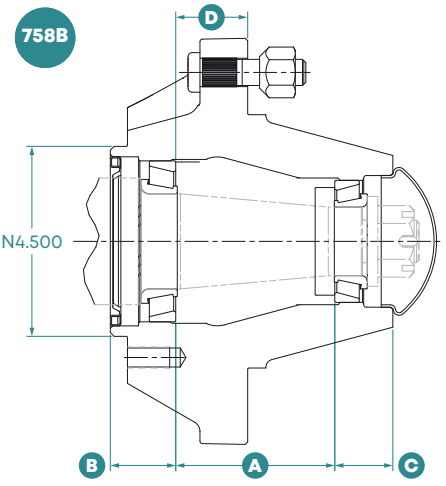

Hub – Technical Information

MODEL NO.	CAP (LBS)	HUB ASSY.	HUB SUB ASSY.	INNER CUP	OUTER CUP	INNER CONE	BORE DIA. (IN)	OUTER CONE	BORE DIA. (IN)	HUB CAP	STUD	NUT	SEAL	A (IN)	B (IN)	C (IN)	D (IN)
608	6000	L608200	L608300	JLM506810 P702213	LM501310 P702204	JLM506849 P752312	2.16	LM501349 P752306	1.63	P502008	P151402	P201607	CR27394 P602116	2.56	1.50	1.37	0.75
608B	6000	L608201	L608301	JLM506810 P702213	LM501310 P702204	JLM506849 P752312	2.16	LM501349 P752306	1.63	P502008	P151402	P201607	CR27394 P602116	2.56	1.50	1.37	0.75
758	8000	L758200	L758300	382A P702217	LM501310 P702204	387AS P752320	2.25	LM501349 P752306	1.63	P502008	P151407	P201607	CR29968 P602122	3.77	1.55	1.38	1.70
758B	8000	L758201	L758301	382A P702217	LM501310 P702204	387AS P752320	2.25	LM501349 P752306	1.63	P502008	P151407	P201607	CR29968 P602122	3.77	1.55	1.38	1.70
758HD	10000	L758208	L758308	39412 P702252	LM501310 P702248	39250 P752354	2.50	LM501349 P752338	1.63	P502008	P151409	P201630	TC324156SA P602140	3.77	1.55	1.38	1.70

Hub capacity based on .38" positive offset
B = Additional version that has brake mounting pattern
For alternate 8 bolt Straddle please refer to page 52-54.

8 bolt / 8" bolt circle / 6" pilot

758 HD

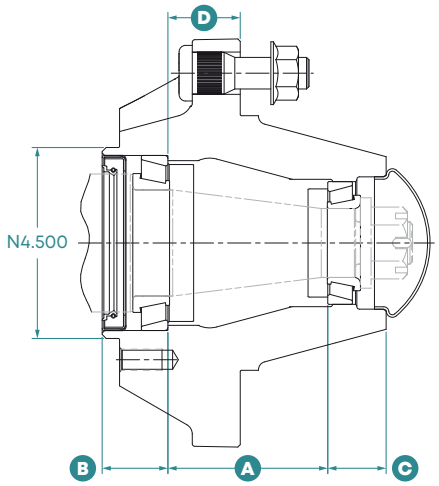

Spindle – Technical Information

SPINDLE STYLE	MODEL NO.	MATERIAL	MATERIAL DIA. (IN)	SPINDLE ASSY.	MACHINED SPINDLE	WASHER	SLOTTED NUT	COTTER PIN	OVERALL LENGTH (IN)	THREAD (IN)	SEAL DIA. (IN)
STRAIGHT	608	CDS	2-3/4	LS5116	LS7116	P301806	P251706	P401902	14	1-14	2-3/4
STRAIGHT	608B	CDS	2-3/4	LS5116	LS7116	P301806	P251706	P401902	14	1-14	2-3/4
STRAIGHT	758	CDS	3	LS5199	LS7199	P301806	P251706	P401902	16	1-14	3
STRAIGHT	758B	CDS	3	LS5199	LS7199	P301806	P251706	P401902	16	1-14	3
STRAIGHT	758HD	CDS	3-1/4	LS5392	LS7392	P301806	P251706	P401902	16	1-14	3-1/4

Hub capacity based on .38" positive offset
B = Additional version that has brake mounting pattern
For alternate 8 bolt Straddle please refer to page 52-54.

Spindles

- Straight spindles are standard
- Special spindles along with bent and double end spindles will be manufactured to customer specifications. Bent spindles are not available for spindles larger than 2-3/4"
- Please contact your sales person with your requirements

8 bolt / 8" bolt circle / 6" pilot

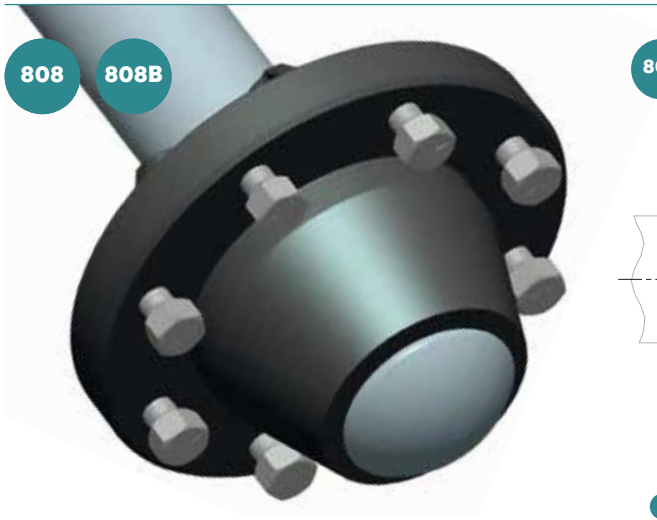

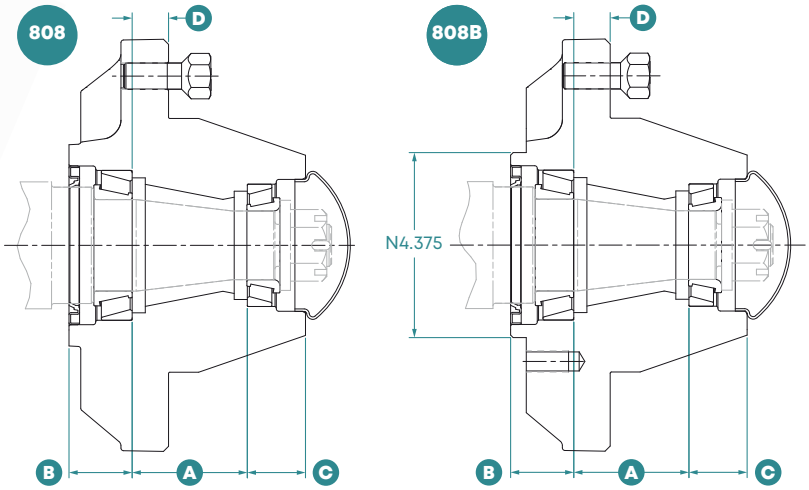

Hub – Technical Information

MODEL NO.	CAP (LBS)	HUB ASSY.	HUB SUB ASSY.	INNER CUP	OUTER CUP	INNER CONE	BORE DIA. (IN)	OUTER CONE	BORE DIA. (IN)	HUB CAP	WHEEL BOLT	STUD	NUT	SEAL	A (IN)	B (IN)	C (IN)	D (IN)
808	8000	L808200	L808300	JLM506810 P702213	LM501310 P702204	JLM506849 P752312	2.16	LM501349 P752306	1.63	P502008	P101304	–	–	CR27394 P602116	2.72	1.50	1.38	0.86
808B	8000	L808203	L808303	JLM506810 P702213	LM501310 P702204	JLM506849 P752312	2.16	LM501349 P752306	1.63	P502008	P101304	–	–	CR27394 P602116	2.72	1.50	1.38	0.86
778	4910	L778200	L778300	25520 P702201	25821 P702205	25590 P752303	1.79	25877 P752308	1.38	P502001	P101303	–	–	CR20148 P602104	2.50	1.94	1.25	0.88
813	4910	L813200	L813300	22520 P702201	25821 P702205	25590 P752303	1.79	25877 P752308	1.38	P502001	–	P151403	P201604	CR20148 P602104	2.50	1.94	1.25	0.88

808 and 808B hub capacity based on .38" negative offset
778 and 813 hub capacity on based on 1.5" negative offset
B = Additional version that has brake mounting pattern
# = These hubs are machined for brake drum to mount to the hub using the stud bolts
For alternate 8 bolt Straddle please refer to page 52-54.

8 bolt / 8" bolt circle / 6" pilot

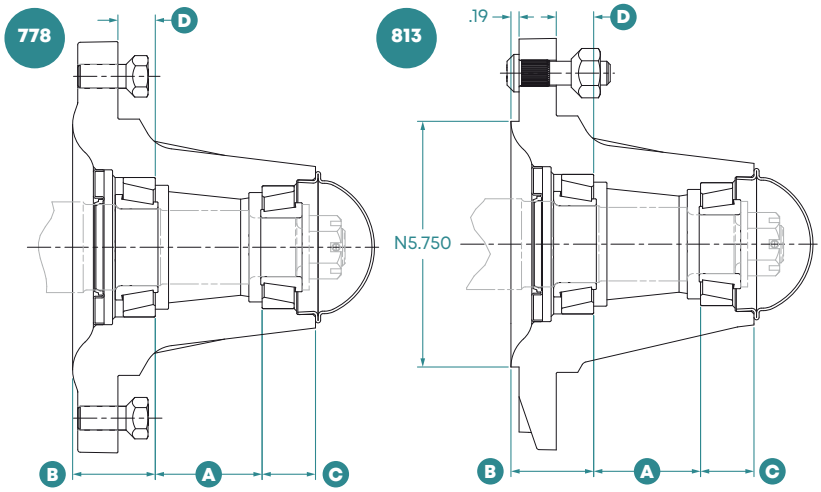

Spindle – Technical Information

SPINDLE STYLE	MODEL NO.	MATERIAL	MATERIAL DIA. (IN)	SPINDLE ASSY.	MACHINED SPINDLE	WASHER	SLOTTED NUT	COTTER PIN	OVERALL LENGTH (IN)	THREAD (IN)	SEAL DIA. (IN)
STRAIGHT	808	CDS	3	LS5366	LS7366	P301806	P251706	P401902	16	1-14	2-3/4
STRAIGHT	808B	CDS	3	LS5366	LS7366	P301806	P251706	P401902	16	1-14	2-3/4
STRAIGHT	778	CDS	2-1/8	LS5105	LS7105	P301806	P251706	P401902	15-7/16	7/8-14	2
STRAIGHT	813#	CDS	2-1/8	LS5105	LS7105	P301806	P251706	P401902	15-7/16	7/8-14	2

Spindles

- Straight spindles are standard
- Special spindles along with bent and double end spindles will be manufactured to customer specifications. Bent spindles are not available for spindles larger than 2-3/4"
- Please contact your sales person with your requirements

8 bolt / 8" bolt circle / 6" pilot

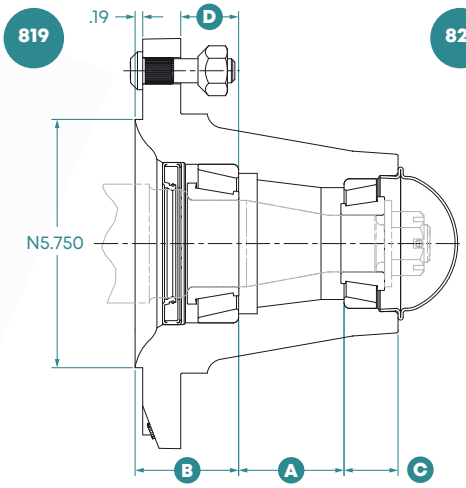

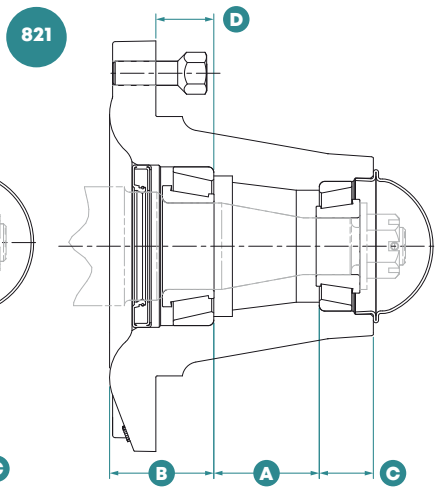

Hub – Technical Information

MODEL NO.	CAP (LBS)	HUB ASSY.	HUB SUB ASSY.	INNER CUP	OUTER CUP	INNER CONE	BORE DIA. (IN)	OUTER CONE	BORE DIA. (IN)	HUB CAP	WHEEL BOLT	STUD	NUT	SEAL	A (IN)	B (IN)	C (IN)	D (IN)
819	5790	L819200	L819300	3720 P702202	2720 P702209	3780 P752309	2.00	2790 P752304	1.31	P502001	–	P151403	P201604	CR25091 P602108	2.44	2.41	1.25	1.34
821	5790	L821200	L821300	3720 P702202	2720 P702209	3780 P752309	2.00	2790 P752304	1.31	P502001	P101305	–	–	CR25091 P602108	2.44	2.41	1.25	1.34
886	8000	L886200	L886300	382A P702253	2720 P702236	387AS P752356	2.25	2793 P752373	1.37	P502001	–	P151402	P201601	TC30404SA P602201	3.00	1.94	1.25	0.81
886B	8000	L886202	L886302	382A P702253	2720 P702236	387AS P752356	2.25	2793 P752373	1.37	P502001	–	P151402	P201601	TC30404SA P602201	3.00	1.94	1.25	0.81

Hub capacity based on 1.5" negative offset
B = Additional version that has brake mounting pattern
# = These hubs are machined for a brake drum to mount to the hub using the stud bolts
For alternate 8 bolt Straddle please refer to page 52-54.

8 bolt / 8" bolt circle / 6" pilot

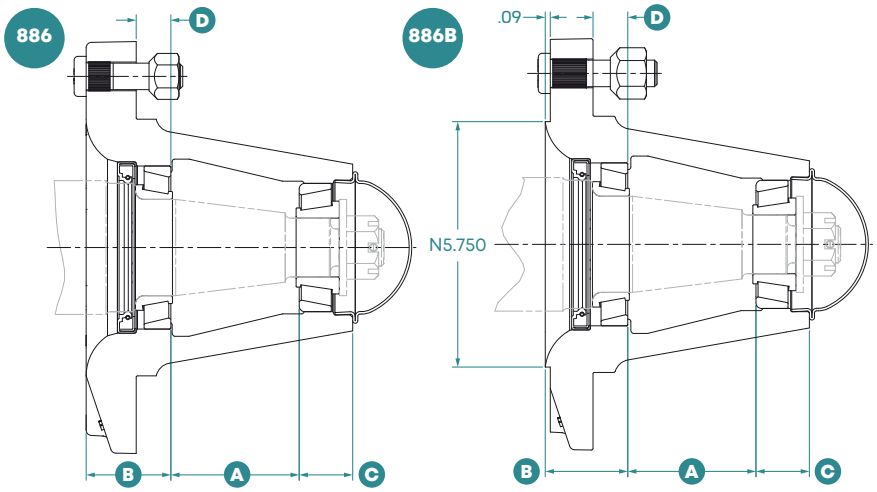

Spindle – Technical Information

SPINDLE STYLE	MODEL NO.	MATERIAL	MATERIAL DIA. (IN)	SPINDLE ASSY.	MACHINED SPINDLE	WASHER	SLOTTED NUT	COTTER PIN	OVERALL LENGTH (IN)	THREAD (IN)	SEAL DIA. (IN)
STRAIGHT	819	CDS	2-3/4	LS5108	LS7108	P301804	P251721	P401901	14-5/16	7/8-14	2-1/2
STRAIGHT	821	CDS	2-3/4	LS5108	LS7108	P301804	P251721	P401901	14-5/16	7/8-14	2-1/2
STRAIGHT	886	CDS	3-1/8	LS8051	LS9051	P301804	P251721	P401901	16	7/8-14	3
STRAIGHT	886B	CDS	3-1/8	LS8051	LS9051	P301804	P251721	P401901	16	7/8-14	3

Spindles

- Straight spindles are standard
- Special spindles along with bent and double end spindles will be manufactured to customer specifications. Bent spindles are not available for spindles larger than 2-3/4"
- Please contact your sales person with your requirements

8 bolt / 8" bolt circle / 6" pilot

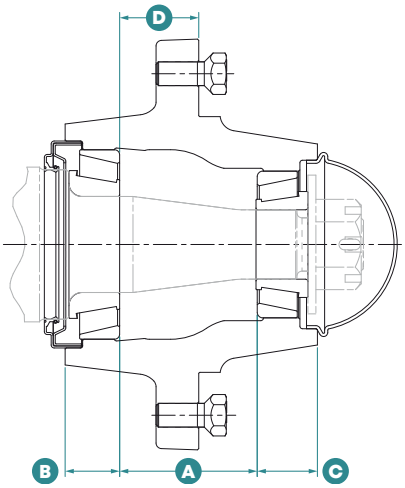

Hub – Technical Information

MODEL NO.	CAP (LBS)	HUB ASSY.	HUB SUB ASSY.	INNER CUP	OUTER CUP	INNER CONE	BORE DIA. (IN)	OUTER CONE	BORE DIA. (IN)	HUB CAP	WHEEL BOLT	SEAL	A (IN)	B (IN)	C (IN)	D (IN)
848	8000	L848200	L848300	39520 P702296	3525 P702275	39581 P752383	2.25	3585 P752379	1.63	P502050	P101303	CR35062 P602183	3.22	1.28	1.41	1.85

Spindle – Technical Information

SPINDLE STYLE	MODEL NO.	MATERIAL	MATERIAL DIA. (IN)	SPINDLE ASSY.	MACHINED SPINDLE	WASHER	SLOTTED NUT	COTTER PIN	OVERALL LENGTH (IN)	THREAD (IN)	SEAL DIA. (IN)
STRAIGHT	848	CDS	3-5/8	LS8073	LS9073	P301832	P251702	P401913	15.59	1-1/4-12	3-1/2

Hub capacity based on 1.5" positive offset
For alternate 8 bolt Straddle please refer to page 52-54.

8 bolt / 10.827" [275mm] bolt circle / 8.69" pilot

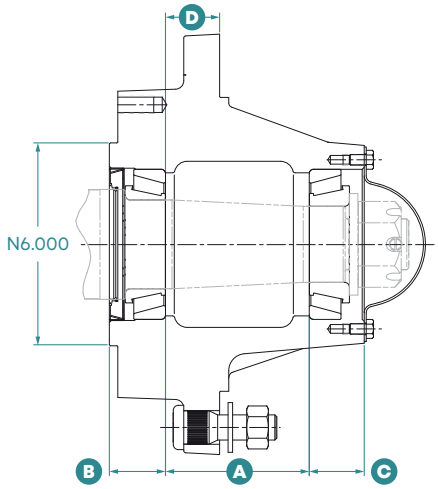

Hub – Technical Information

MODEL NO.	CAP (LBS)	HUB ASSY.	HUB SUB ASSY.	INNER CUP	OUTER CUP	INNER CONE	BORE DIA. (IN)	OUTER CONE	BORE DIA. (IN)	HUB CAP	STUD	NUT	SEAL	A (IN)	B (IN)	C (IN)	D (IN)
801*	10000	L801200	L801300	3920 P702279	3920 P702279	3984 P752388	2.63	3979 P752387	2.25	P502016	P151409	P201636	CR32501 P602260	4.25	1.66	1.62	1.60

Spindle – Technical Information

SPINDLE STYLE	MODEL NO.	MATERIAL	MATERIAL DIA. (IN)	SPINDLE ASSY.	MACHINED SPINDLE	WASHER	SLOTTED NUT	COTTER PIN	OVERALL LENGTH (IN)	THREAD (IN)	SEAL DIA. (IN)
STRAIGHT	801	CDS	3-1/4	LS8057	LS9057	P301856	P251720	P401914	18	1-1/2-12	3-1/4

Hub capacity based on 0 offset
*This hub has a 6 on 8.25" bolt pattern for brake machined (1/2-20 UNF)

Spindles

- Straight spindles are standard
- Special spindles along with bent and double end spindles will be manufactured to customer specifications. Bent spindles are not available for spindles larger than 2-3/4"
- Please contact your sales person with your requirements

10 bolt / 11.25" bolt circle / 8.66" [220mm] pilot

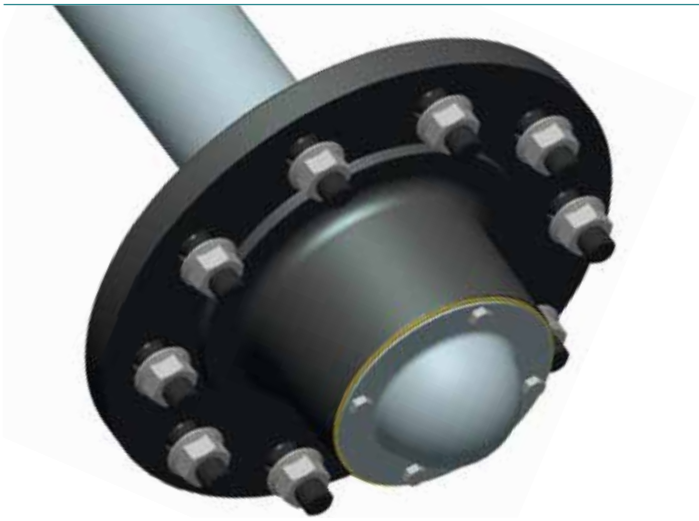

871 871B 873 973 873B 973B

Hub – Technical Information

MODEL NO.	CAP (LBS)	HUB ASSY.	HUB SUB ASSY.	INNER CUP	OUTER CUP	INNER CONE	BORE DIA. (IN)	OUTER CONE	BORE DIA. (IN)	HUB CAP	STUD	NUT	SEAL	A (IN)	B (IN)	C (IN)	D (IN)
871	REFERENCE ONLY, NEW DESIGN PROFI-HUB 286 SERIES REPLACES PREVOUS MODELS SEE PAGE 14 FOR DETAILS																
871B	REFERENCE ONLY, NEW DESIGN PROFI-HUB 286 SERIES REPLACES PREVOUS MODELS SEE PAGE 14 FOR DETAILS																
873	REFERENCE ONLY, NEW DESIGN PROFI-HUB 286 SERIES REPLACES PREVOUS MODELS SEE PAGE 14 FOR DETAILS																
873B	REFERENCE ONLY, NEW DESIGN PROFI-HUB 286 SERIES REPLACES PREVOUS MODELS SEE PAGE 14 FOR DETAILS																
973	17500	REFERENCE ONLY, NEW DESIGN PROFI-HUB 286 SERIES REPLACES PREVOUS MODELS SEE PAGE 14 FOR DETAILS															
973B	17500	REFERENCE ONLY, NEW DESIGN PROFI-HUB 286 SERIES REPLACES PREVOUS MODELS SEE PAGE 14 FOR DETAILS															
881(A)	20000	L881210	L881310	HM218210 P702330	HM212011 P702290	HM218248 P752406	3.54	HM212049 P752428	2.62	P502041	P151409	P201612	CR43771 P602126	3.25	2.28	1.72	1.66
900*	22500	L900200	L900300	47620 P702282	39520 P702296	47687 P752392	3.25	39585 P752384	2.50	P502041	P151443	P201612	CR38730 P602213	2.63	1.9	1.22	0.00

10 bolt / 11.25" bolt circle / 8.66" [220mm] pilot

881A

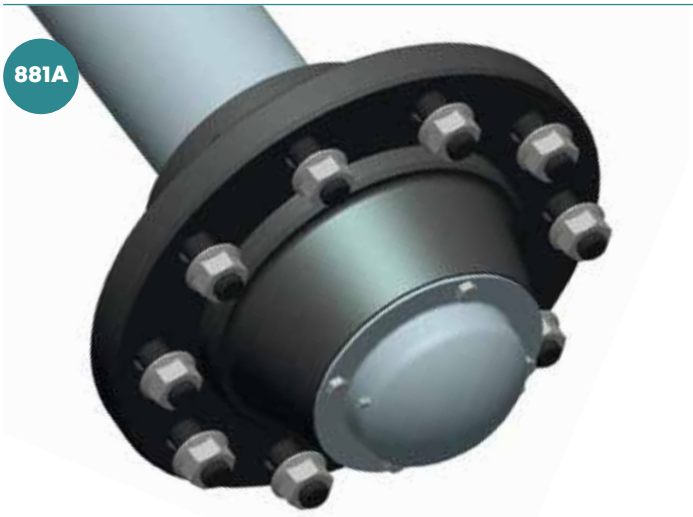

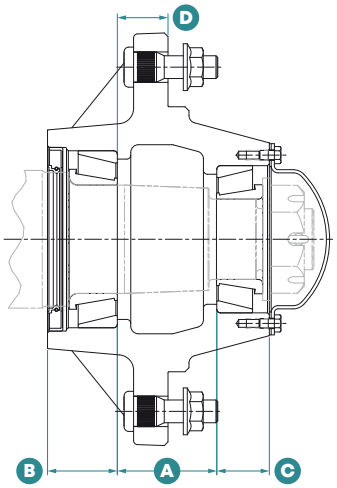

900

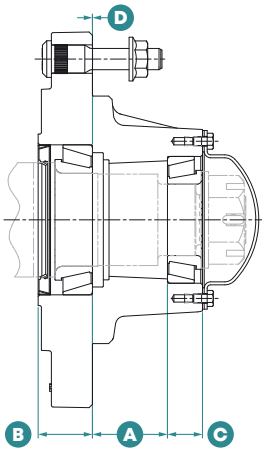

881(A) and 900 hub based on 1.5" positive offset
All other hub capacities based on 0 offset
973 and 900 hubs are made from ductile iron
*900 hub is currently produced without brake pattern. this hub is also available with a 6 on 8.25" dia brake pattern (1/2-20 UNF)
B = Bolt pattern on brake version hub is 6 on 8.25" dia (1/2-20 UNF)

Spindles

- Straight spindles are standard
- Special spindles along with bent and double end spindles will be manufactured to customer specifications. Bent spindles are not available for spindles larger than 2-3/4"
- Please contact your sales person with your requirements

10 bolt / 13.188" bolt circle / 11.05" pilot

881 981

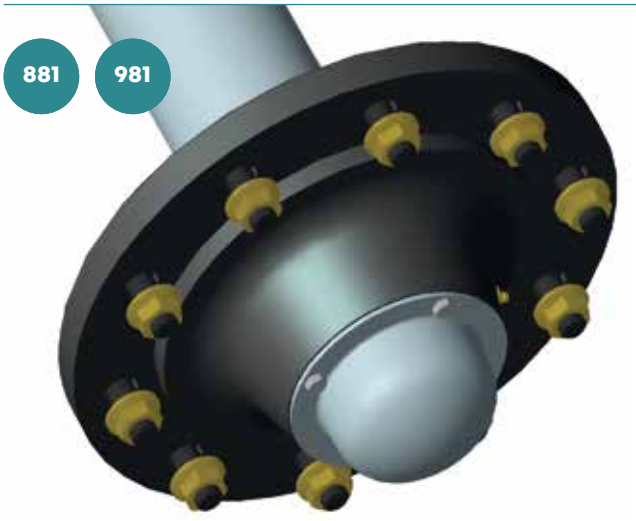

891 991

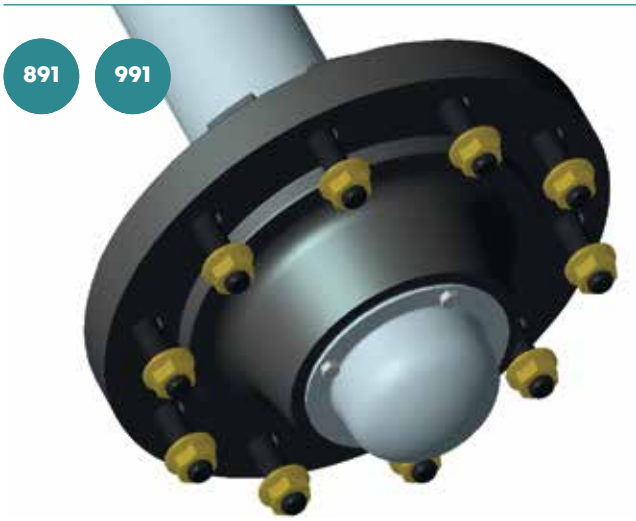

Hub – Technical Information

MODEL NO.	CAP (LBS)	HUB ASSY.	HUB SUB ASSY.	INNER CUP	OUTER CUP	INNER CONE	BORE DIA. (IN)	OUTER CONE	BORE DIA. (IN)	HUB CAP	STUD	NUT	SEAL	A (IN)	B (IN)	C (IN)	D (IN)
881	REFERENCE ONLY, NEW DESIGN PROFI-HUB 335 SERIES REPLACES PREVOUS MODELS SEE PAGE 15 FOR DETAILS																
981	REFERENCE ONLY, NEW DESIGN PROFI-HUB 335 SERIES REPLACES PREVOUS MODELS SEE PAGE 15 FOR DETAILS																
891*	REFERENCE ONLY, NEW DESIGN PROFI-HUB 335 SERIES REPLACES PREVOUS MODELS SEE PAGE 15 FOR DETAILS																
991*	REFERENCE ONLY, NEW DESIGN PROFI-HUB 335 SERIES REPLACES PREVOUS MODELS SEE PAGE 15 FOR DETAILS																
351	35000	L351203	L351303	71750 P702347	653 P702344	71455 P752454	4.53	663 P752451	3.25	P502103	P151488	P201655	POS5507556SA P602299	4.53	2.75	2.00	2.16
351B	35000	L351202	L351302	71750 P702347	653 P702344	71455 P752454	4.53	663 P752451	3.25	P502103	P151488	P201655	POS5507556SA P602299	4.53	2.75	2.00	2.16
351HD*	35000	L351204	L351304	71750 P702347	832 P702369	71455 P752454	4.53	842 P752473	3.25	P502103	P151488	P201655	POS5507556SA P602299	4.53	2.75	2.00	2.16

10 bolt / 13.188" bolt circle / 11.05" pilot

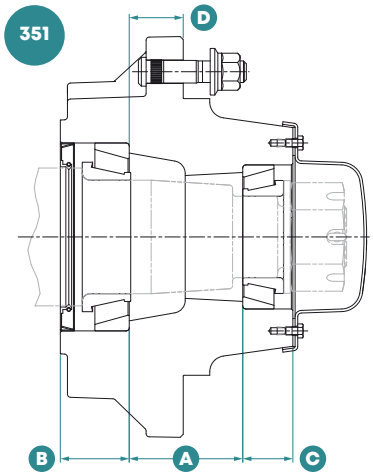

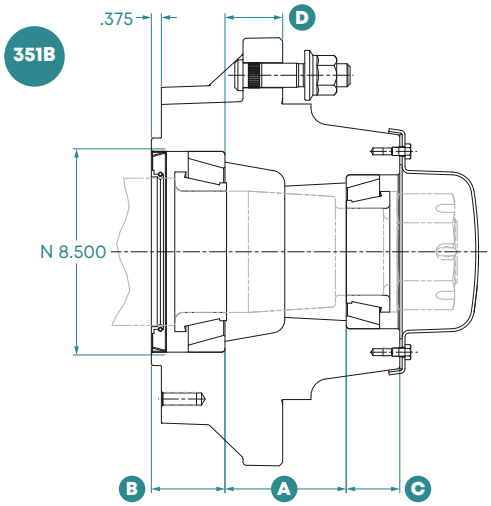

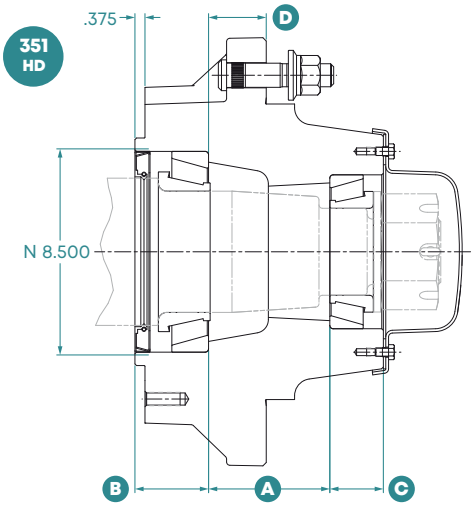

Spindle – Technical Information

SPINDLE STYLE	MODEL NO.	MATERIAL	MATERIAL DIA. (IN)	SPINDLE ASSY.	MACHINED SPINDLE	WASHER	SLOTTED NUT	COTTER PIN	OVERALL LENGTH (IN)	THREAD (IN)	SEAL DIA. (IN)
STRAIGHT	881	CDS	4-1/2	LS5301	LS7301	P301827	P251727	P401928	26-1/2	2-12	4-3/8
STRAIGHT	981	CDS	4-1/2	LS5301	LS7301	P301827	P251727	P401928	26-1/2	2-12	4-3/8
STRAIGHT	891	STRESS PROOF	4-1/2	LS8128	LS9128	P301835	P251723	P401914	26-1/2	2-12	4-3/8
STRAIGHT	991	STRESS PROOF	4-1/2	LS8128	LS9128	P301835	P251723	P401914	26-1/2	2-12	4-3/8
STRAIGHT	351	CDS	5-1/2	LS8519	LS9519	P301871	P251733	P401932	26-1/2	2-1/2-12	5-1/2
STRAIGHT	351B	CDS	5-1/2	LS8519	LS9519	P301871	P251733	P401932	26-1/2	2-1/2-12	5-1/2
STRAIGHT	351HD	CDS	5-1/2	LS8519	LS9519	P301871	P251733	P401932	26-1/2	2-1/2-12	5-1/2

Hub capacity based on 1.5" positive offset
*These hubs are available with a brake pattern for brake mounting
B = Bolt pattern on brake version hub is 10 on 11" dia (1/2-20 UNF)

10 bolt / 13.188" bolt circle / 11.05" pilot

882

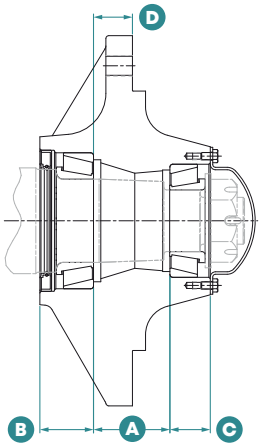

500

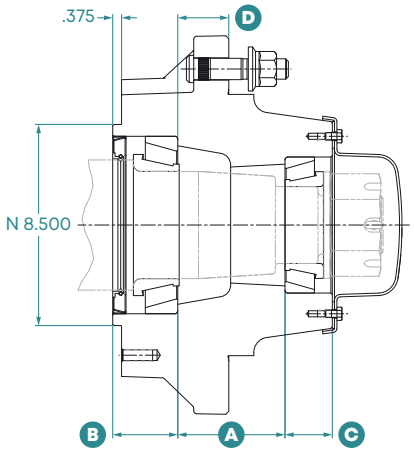

Hub – Technical Information

MODEL NO.	CAP (LBS)	HUB ASSY.	HUB SUB ASSY.	INNER CUP	OUTER CUP	INNER CONE	BORE DIA. (IN)	OUTER CONE	BORE DIA. (IN)	HUB CAP	STUD	NUT	SEAL	A (IN)	B (IN)	C (IN)	D (IN)
882	22500	L882202	L881302	HM218210 P702330	HM212011 P752290	HM218248 P752406	3.54	HM212049 P752428	2.62	P502041	–	–	CR43771 P602126	3.25	2.28	1.72	1.66
500*	50000	L500200	L500300	792 P702372	832 P702369	795 P752476	4.75	842 P752473	3.25	P502103	P151488	P201655	POS5508163SA P602328	4.53	2.75	2.00	2.16

Spindle – Technical Information

SPINDLE STYLE	MODEL NO.	MATERIAL	MATERIAL DIA. (IN)	SPINDLE ASSY.	MACHINED SPINDLE	WASHER	SLOTTED NUT	COTTER PIN	OVERALL LENGTH (IN)	THREAD (IN)	SEAL DIA. (IN)
STRAIGHT	882	CDS	4-1/2	LS5301	LS7301	P301827	P251727	P401928	26-1/2	2-12	4-3/8
STRAIGHT	500	CDS	6	LS5969	LS7969	P301871	P251733	P401932	26-1/2	2-1/2-12	5-1/2

Hub capacity based on 1.5" positive offset
*These hubs are available with a brake pattern for brake mounting

10 bolt / 10" bolt circle / 7" pilot

674

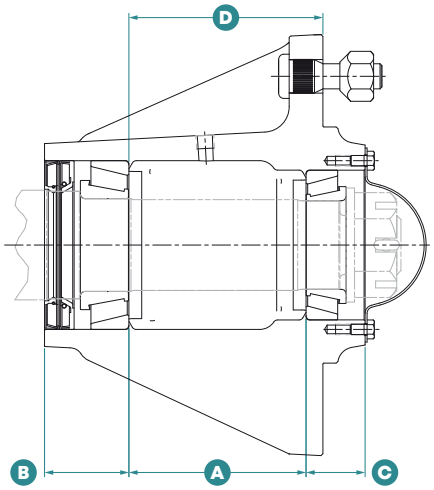

Hub – Technical Information

MODEL NO.	CAP (LBS)	HUB ASSY.	HUB SUB ASSY.	INNER CUP	OUTER CUP	INNER CONE	BORE DIA. (IN)	OUTER CONE	BORE DIA. (IN)	HUB CAP	STUD	NUT	SEAL	A (IN)	B (IN)	C (IN)	D (IN)
674	7750	L674200	L674300	563 P702284	3920 P702279	566 P752393	2.75	3984 P752388	2.63	P502016	P151409	P201641	CR31955 P602217	5.25	2.50	1.75	5.75

Spindle – Technical Information

SPINDLE STYLE	MODEL NO.	MATERIAL	MATERIAL DIA. (IN)	SPINDLE ASSY.	MACHINED SPINDLE	WASHER	SLOTTED NUT	COTTER PIN	OVERALL LENGTH (IN)	THREAD (IN)	SEAL DIA. (IN)
STRAIGHT	674	CDS	3-1/4	LS8058	LS9058	P301838	P251711	P401906	16-1/2	1-3/4-12	3-3/16

Hub capacity based on 3.5" positive offset

Spindles

- Straight spindles are standard
- Special spindles along with bent and double end spindles will be manufactured to customer specifications. Bent spindles are not available for spindles larger than 2-3/4"
- Please contact your sales person with your requirements

20 bolt / 20.125" bolt circle / 17.82" pilot

501

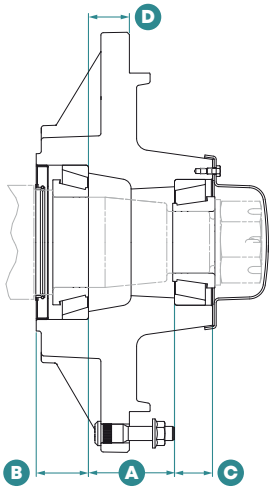

Hub – Technical Information

MODEL NO.	CAP (LBS)	HUB ASSY.	HUB SUB ASSY.	INNER CUP	OUTER CUP	INNER CONE	BORE DIA. (IN)	OUTER CONE	BORE DIA. (IN)	HUB CAP	STUD	NUT	SEAL	A (IN)	B (IN)	C (IN)	D (IN)
501*	50000	L501200	L501300	792 P702372	832 P702369	795 P752476	4.75	842 P752473	3.25	P502103	P151443	P201612	P0S5508163SA P602328	4.53	2.75	2.00	2.16

Hub capacity based on 1.5" positive offset
*These hubs are available with a brake pattern for brake mounting

Spindles

- Straight spindles are standard
- Special spindles along with bent and double end spindles will be manufactured to customer specifications. Bent spindles are not available for spindles larger than 2-3/4"
- Please contact your sales person with your requirements

Straddle Hubs & Spindles

Coulter Hubs & Spindles

Recreational Vehicles Hubs & Spindles

4 bolt / 5.000" bolt circle / 3.625" pilot

104

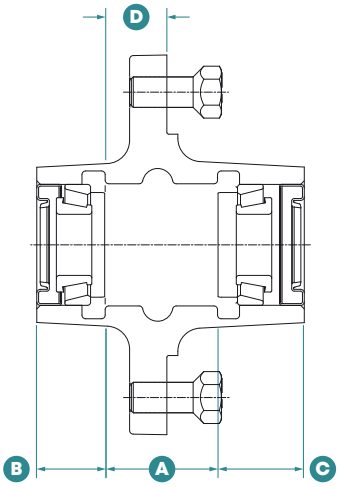

5 bolt / 4.500" bolt circle / 3.812" pilot

545

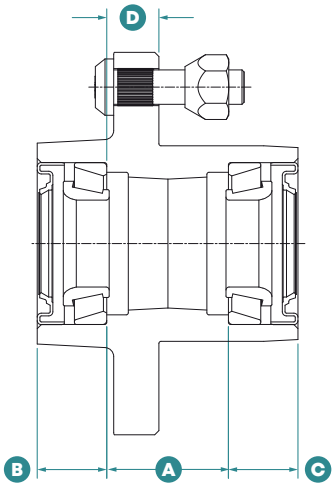

Hub – Technical Information

MODEL NO.	CAP (LBS)	HUB ASSY.	HUB SUB ASSY.	INNER CUP	OUTER CUP	INNER CONE	BORE DIA. (IN)	OUTER CONE	BORE DIA. (IN)	WHEEL BOLT	STUD	NUT	SEAL	A (IN)	B (IN)	C (IN)	D (IN)
104	1000	L104201	L104300	L44610 P702215	L44610 P702215	L44643 P752316	1.00	L44643 P752316	1.00	P101301	–	–	CR12411 P602123	2.41	0.88	1.09	1.25
545	1500	L545214	L545314	LM67010 P702203	LM67010 P702203	LM67048 P752311	1.25	LM67048 P752311	1.25	–	P151423	P201603	TC15233VH P602149	1.75	1.00	1.00	0.75

Hub capacity based on .38" negative offset

Spindles

- Straight spindles are standard
- Special spindles along with bent and double end spindles will be manufactured to customer specifications. Bent spindles are not available for spindles larger than 2-3/4"
- Please contact your sales person with your requirements

5 bolt / 5.500" bolt circle / 4.000" pilot

215 650 28B

215

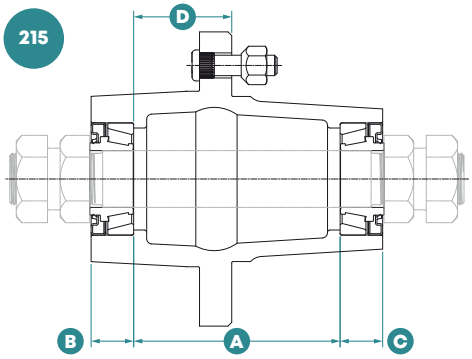

28B

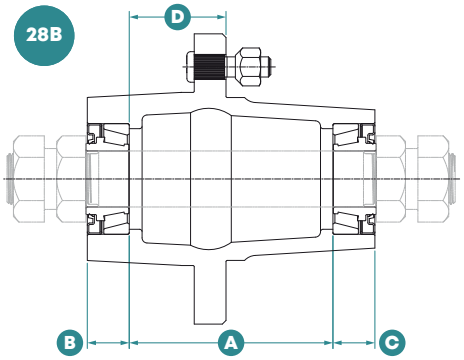

6 bolt / 6.000" bolt circle / 4.625" pilot

617

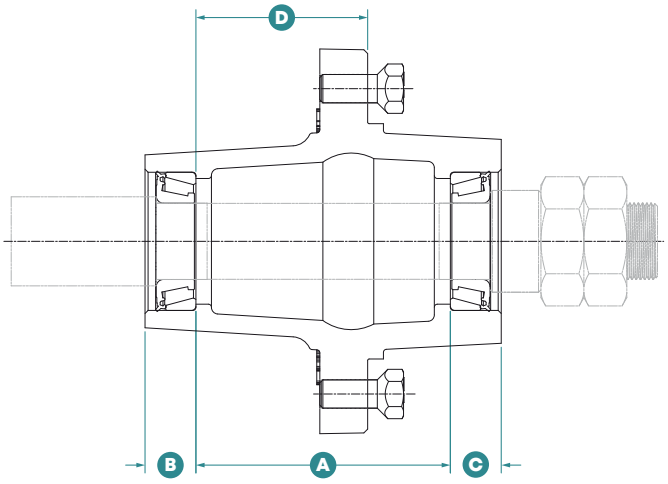

Hub – Technical Information

MODEL NO.	CAP (LBS)	HUB ASSY.	HUB SUB ASSY.	INNER CUP	OUTER CUP	INNER CONE	BORE DIA. (IN)	OUTER CONE	BORE DIA. (IN)	STUD	NUT	SEAL	A (IN)	B (IN)	C (IN)	D (IN)
215	2100	L215200	L215300	14276 P702216	14276 P702216	14136A P752318	1.38	14136A P752318	1.38	P151401	P201602	CR17617 P602106	5.00	1.03	1.03	2.38
650520	3000	L520200	L520300	14276 P702216	14276 P702216	14136A P752318	1.38	14136A P752318	1.38	P151404	P201602	CR17617 P602106	5.00	1.03	1.03	2.38
617	3500	L617200	L617300	13621 P702219	13621 P702219	13600LA P752479	1.50	13600LA P752479	1.50	–	–	PART OF BEARING CONE	5.00	1.00	1.00	3.38
525	3000	L525200	L525300	14276 P702216	14276 P702216	14136A P752318	1.38	14136A P752318	1.38	P151401	P201602	CR17617 P602106	5.00	1.82	1.13	2.44
608	6000	L608259	L608359	25520 P702201	25520 P702201	25580 P752405	1.75	25580 P752405	1.75	P151407	P201607	CR23744 P602292	2.40	1.45	1.48	0.75

617 hub capacity based on 1.12" positive offset
525 hub capacity based on .25" negative offset

5 bolt / 5.500" bolt circle / 4.000" pilot

525

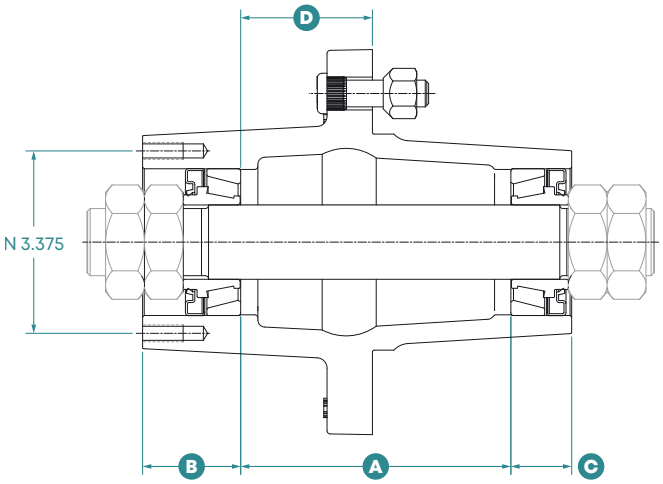

8 bolt / 8.000" bolt circle / 6.000" pilot

608

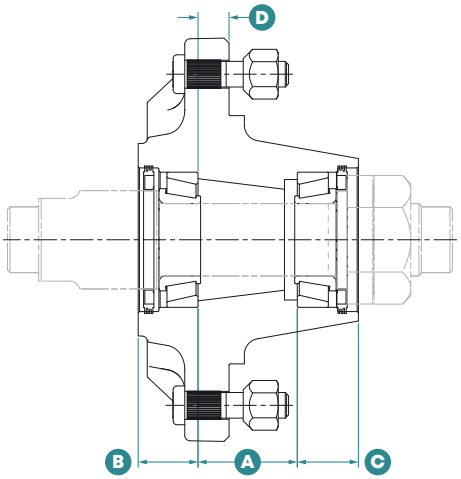

Spindles

- Straight spindles are standard
- Special spindles along with bent and double end spindles will be manufactured to customer specifications. Bent spindles are not available for spindles larger than 2-3/4"
- Please contact your sales person with your requirements

4 bolt / 5.000" bolt circle / 3.625" pilot

104

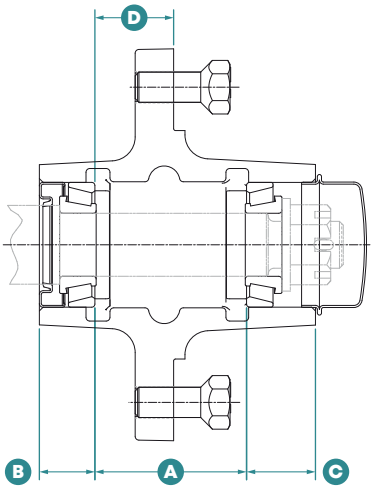

Hub – Technical Information

MODEL NO.	CAP (LBS)	HUB ASSY.	HUB SUB ASSY.	INNER CUP	OUTER CUP	INNER CONE	BORE DIA. (IN)	OUTER CONE	BORE DIA. (IN)	HUB CAP	WHEEL BOLT	SEAL	A (IN)	B (IN)	C (IN)	D (IN)
104	1000	L104200	L104300	L44610 P702215	L44610 P702215	L44643 P752316	1.00	L44643 P752316	1.00	P502010	P101301	CR12411 P602123	2.41	0.88	1.09	1.25
633	1500	L633206	L633306	LM67010 P702203	LM11910 P702210	LM67048 P752311	1.25	LM11949 P752305	0.75	P502003	P101301	CR14974 P602111	2.00	1.00	1.12	0.38

4 bolt / 5.000" bolt circle / 3.625" pilot

633

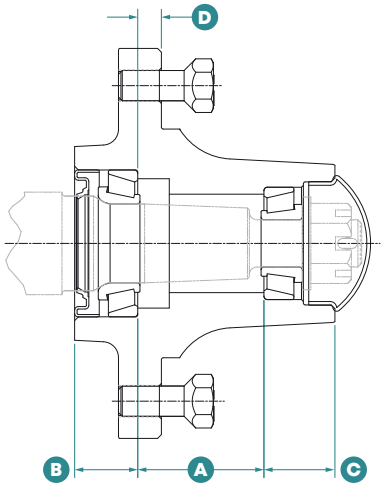

Spindle – Technical Information

SPINDLE STYLE	MODEL NO.	MATERIAL	MATERIAL DIA. (IN)	SPINDLE ASSY.	MACHINED SPINDLE	WASHER	SLOTTED NUT	COTTER PIN	OVERALL LENGTH	THREAD (IN)	SEAL DIA. (IN)
STRAIGHT	104	CDS	1-1/4	LS8163	LS9163	P301804	P251703	P401901	8-1/2	3/4-16	1-1/4
STRAIGHT	633	CDS	1-5/8	LS5101	LS7101	P301802	P251703	P401905	9-5/16	3/4-16	1-1/2

Spindles

- Straight spindles are standard
- Special spindles along with bent and double end spindles will be manufactured to customer specifications. Bent spindles are not available for spindles larger than 2-3/4"
- Please contact your sales person with your requirements

4 bolt / 5.000" bolt circle / 3.625" pilot

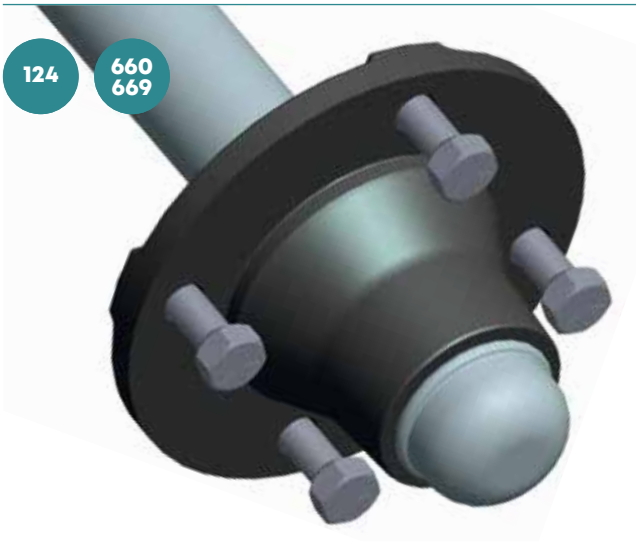

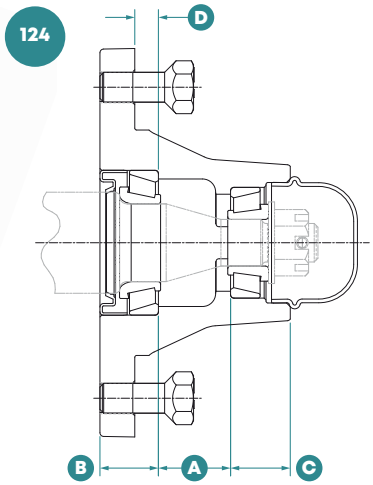

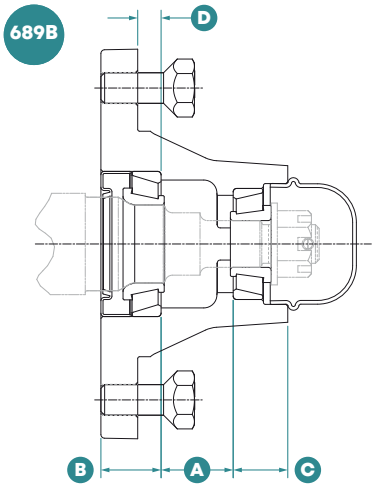

Hub – Technical Information

MODEL NO.	CAP (LBS)	HUB ASSY.	HUB SUB ASSY.	INNER CUP	OUTER CUP	INNER CONE	BORE DIA. (IN)	OUTER CONE	BORE DIA. (IN)	HUB CAP	WHEEL BOLT	SEAL	A (IN)	B (IN)	C (IN)	D (IN)
124	1250	L124200	L124300	LM67010 P702203	LM11910 P702210	LM67048 P752311	1.25	LM11949 P752305	0.75	P502051	P101301	CR16069 P602105	1.16	0.94	0.96	0.38

4 bolt / 5.250" bolt circle

468

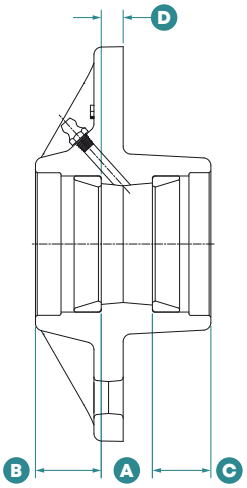

Spindle – Technical Information

SPINDLE STYLE	MODEL NO.	MATERIAL	MATERIAL DIA. (IN)	SPINDLE ASSY.	MACHINED SPINDLE	WASHER	SLOTTED NUT	COTTER PIN	OVERALL LENGTH (IN)	THREAD (IN)	SEAL DIA. (IN)
STRAIGHT	124	CDS	1-5/8	LS5110	LS7110	P301801	P251701	P401905	10	5/8- 18	1-5/8
STRAIGHT	669	CDS	1-5/8	LS5106	LS7106	P301801	P251701	P401905	10	5/8- 18	1-1/2
STRAIGHT	432	CDS	1-5/8	LS5581	LS7581	P301860	P251701	P401916	4-1/2	5/8-18	1-5/8
STRAIGHT	468	NO STANDARD SPINDLE AVAILABLE. CONTACT MOVEERO CUSTOMER SERVICE.									

Spindles

- Straight spindles are standard
- Special spindles along with bent and double end spindles will be manufactured to customer specifications. Bent spindles are not available for spindles larger than 2-3/4"
- Please contact your sales person with your requirements

4 bolt / 4.000" bolt circle / 2.500" pilot

084

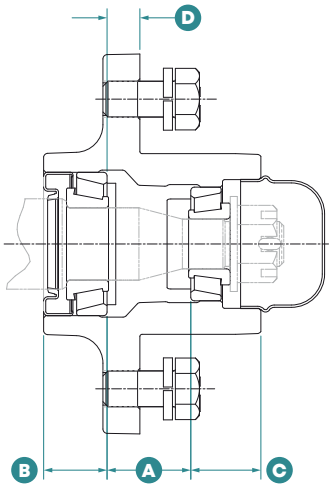

5 bolt / 4.500" bolt circle / 2.500" pilot

056

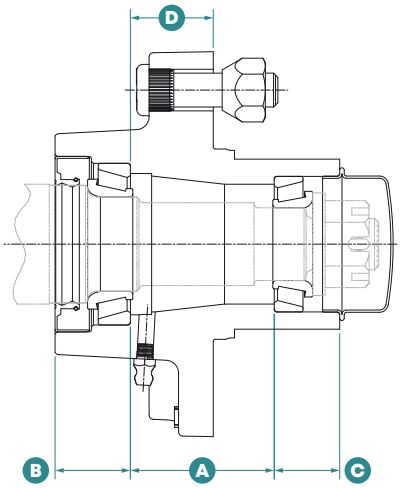

Hub – Technical Information

MODEL NO.	CAP (LBS)	HUB ASSY.	HUB SUB ASSY.	INNER CUP	OUTER CUP	INNER CONE	BORE DIA. (IN)	OUTER CONE	BORE DIA. (IN)	HUB CAP	WHEEL BOLT	SEAL	STUD	NUT	A (IN)	B (IN)	C (IN)	D (IN)
084	800	L084200	L084300	L44610 P702302	LM11710 P702218	L44643 P752316	1.00	LM11749 P752321	0.69	P502013	P943301	CR12411 P602123	–	–	1.16	0.88	0.97	0.45
056	1750	L056200	L056300	L68111 P702214	L44610 P702215	L68149 P752315	1.38	L44649 P752314	1.06	P502010	–	CR17144 P602117	P151401	P201603	2.10	1.10	0.95	1.21
440	1250	L440200	L440300	L44610 P702302	L44610 P702302	L44643 P752316	1.00	L44643 P752316	1.00	P502079	P101302	TC121982VH P602234	–	–	2.36	0.85	0.79	1.34
545	1250	L545200	L545300	L44610 P702300	L44610 P702300	L44643 P752408	1.00	L44643 P752408	1.00	P502079	–	TC121982VH P602234	P151423	P201603	2.36	0.85	0.79	1.34

Hub capacity based on 0" offset

4 bolt / 4.000" bolt circle / 2.500" pilot

440

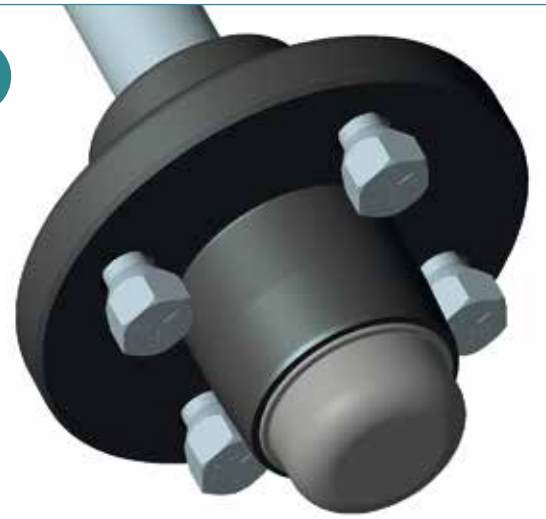

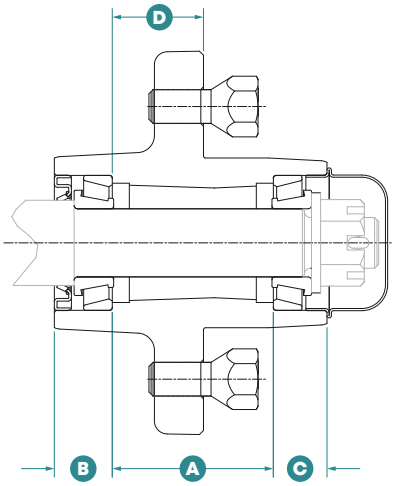

5 bolt / 4.500" bolt circle / 2.500" pilot

545

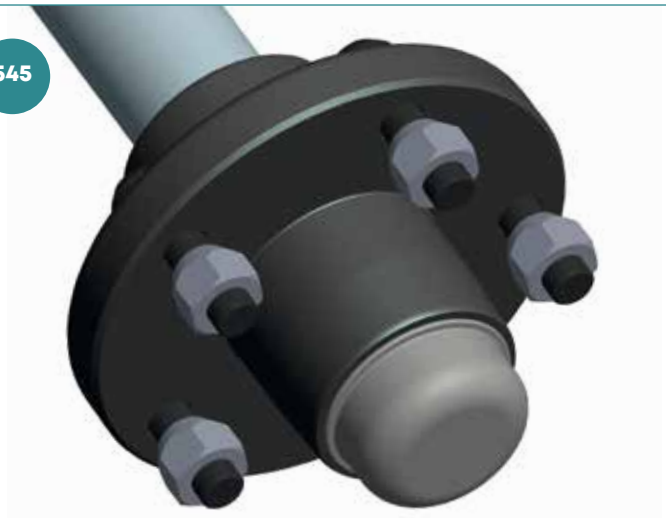

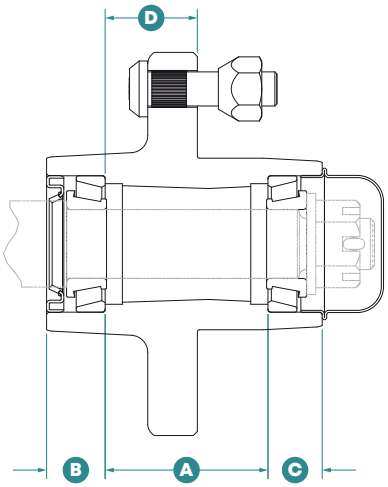

Spindle – Technical Information

SPINDLE STYLE	MODEL NO.	MATERIAL	MATERIAL DIA. (IN)	SPINDLE ASSY.	MACHINED SPINDLE	WASHER	SLOTTED NUT	COTTER PIN	OVERALL LENGTH (IN)	THREAD (IN)	SEAL DIA. (IN)
STRAIGHT	084	CDS	1-1/4	LS5202	LS7202	P301801	P251701	P401905	7-1/2	5/8-18	1-1/4
STRAIGHT	056	CDS	1-3/4	LS5303	LS7303	P301807	P251703	P401901	8-1/2	3/4-16	1.719
STRAIGHT	440	CDS	1-1/4	LS8106	LS9106	P301802	P251703	P401901	7	3/4-16	1-1/4
STRAIGHT	545	CDS	1-1/4	LS8106	LS9106	P301802	P251703	P401901	7	3/4-16	1-1/4

5 bolt / 4.500" bolt circle / 2.500" pilot

545A

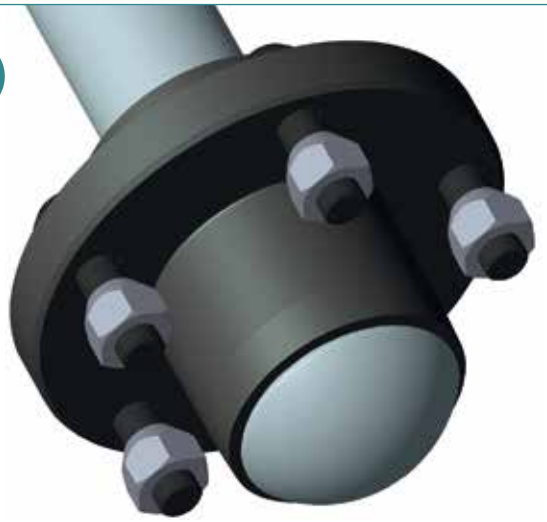

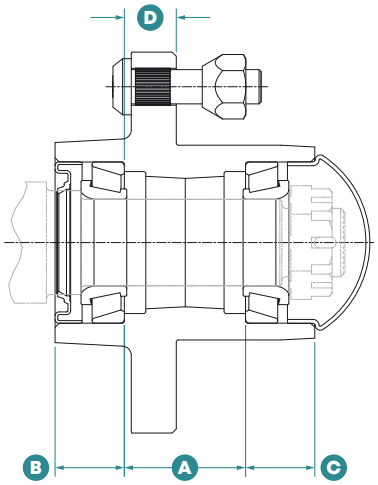

545B

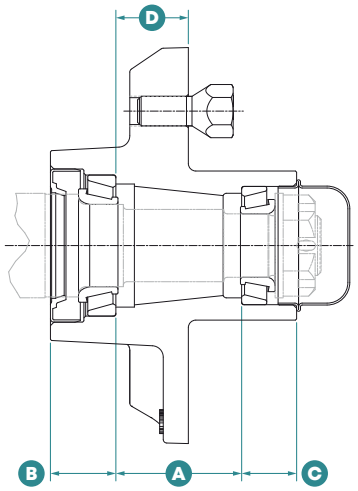

Hub – Technical Information

MODEL NO.	CAP (LBS)	HUB ASSY.	HUB SUB ASSY.	INNER CUP	OUTER CUP	INNER CONE	BORE DIA. (IN)	OUTER CONE	BORE DIA. (IN)	HUB CAP	WHEEL BOLT	STUD	NUT	SEAL	A (IN)	B (IN)	C (IN)	D (IN)
545A	1500	L545212	L545312	LM67010 P702335	LM67010 P702335	LM67048 P752442	1.25	LM67048 P752442	1.25	P502056	–	P151423	P201603	TC15233VH P602149	1.75	1.00	1.00	0.75
545B	1750	L545205	L545305	L68111 P702214	L44610 P702300	L68149 P752315	1.38	L44649 P752411	1.06	P502079	P101302	–	–	TC171255VB P602241	2.11	1.10	0.92	1.21
555	1750	L555200	L555300	L68111 P70203	L44610 P702300	L68149 P752412	1.38	L44649 P752411	1.06	P502079	–	P151423	P201603	TC171255VB P602241	2.11	1.10	0.92	1.21
655	1750	L655200	L655300	L68111 P702214	L44610 P702300	L68149 P752315	1.38	L44649 P752411	1.06	P502079	–	P151423	P201603	CR17144 P602117	2.11	1.11	0.92	1.22
655A	3000	L655201	L655301	25520 P702201	15245 P702229	25580 P752405	1.75	15125 P752364	1.25	P502026	–	P151423	P201603	NOKAF3135G P602179	1.97	1.51	1.06	0.59

Hub capacity based on 0" offset

5 bolt / 5.500" bolt circle / 3.625" pilot

555

555

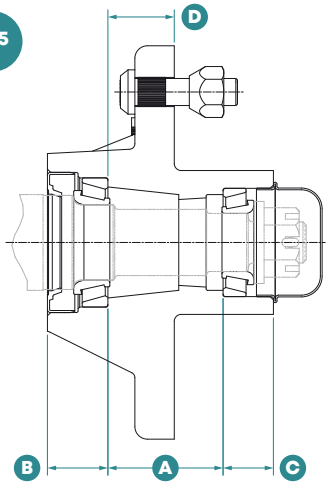

6 bolt / 5.500" bolt circle / 3.500" pilot

655A

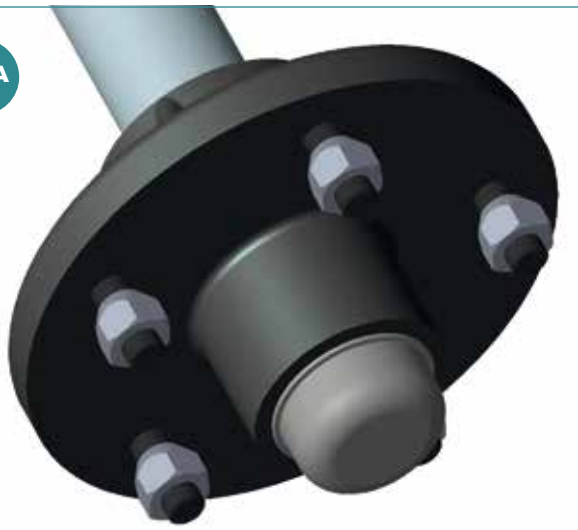

655A

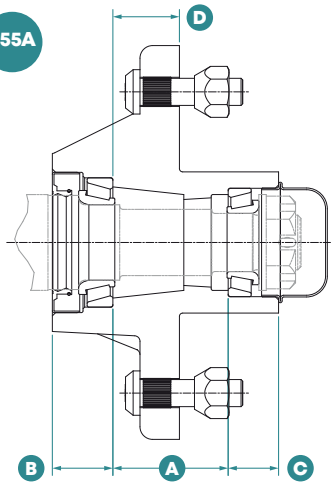

Spindle – Technical Information

SPINDLE STYLE	MODEL NO.	MATERIAL	MATERIAL DIA. (IN)	SPINDLE ASSY.	MACHINED SPINDLE	WASHER	SLOTTED NUT	COTTER PIN	OVERALL LENGTH (IN)	THREAD (IN)	SEAL DIA. (IN)
STRAIGHT	545A	CDS	1-3/4	LS5554	LS7554	-	P251725	P401909	8-3/4	1-14	1-1/2
STRAIGHT	545B	CDS	1-3/4	LS8156	LS9156	P301805	P251758	P401901	8-1/4	1-14	1.719
STRAIGHT	555	CDS	1-3/4	LS5303	LS7303	P301807	P251703	P401901	8-1/2	3/4-16	1.719
STRAIGHT	655	CDS	1-3/4	LS8156	LS9156	P301805	P251758	P401901	8-1/4	1-14	1.719
STRAIGHT	655A	NO STANDARD SPINDLE AVAILABLE. CONTACT MOVEERO CUSTOMER SERVICE.									

Components

Hub Caps

Style 1

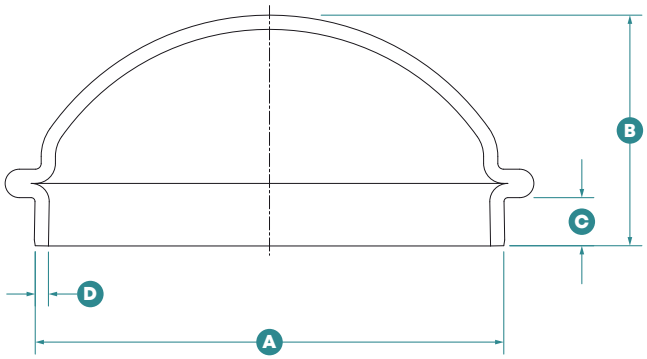

Style 2

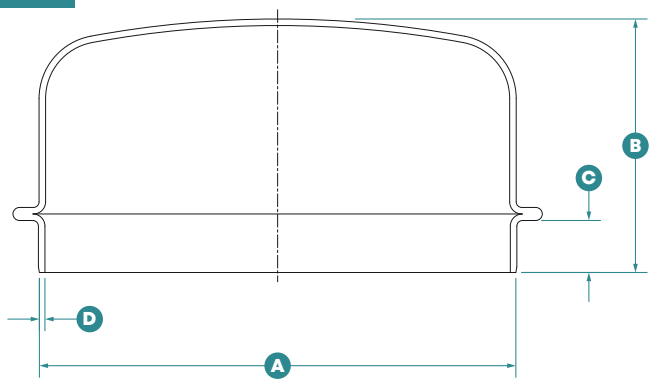

Hub Caps – Technical Information

PART NO.	STYLE	DIM A	DIM B	DIM C	DIM D	FINISH
P502001	1	3.157	1.790	0.410	0.059	N/A
P502003	3	1.960	0.980	0.340	0.059	N/A
P502004	1	2.720	1.424	0.320	0.036	N/A
P502008	3	3.124	1.310	0.280	0.059	N/A
P502010	2	1.988	1.030	0.250	0.032	N/A
P502011	2	2.567	1.360	0.280	0.036	N/A
P502013	2	1.785	1.160	0.280	0.032	N/A
P502015	4	6.250	2.620	4.330	0.12	N/A
P502016	4	5.750	1.750	3.670	0.059	N/A
P502019	2	2.448	1.340	0.310	0.032	ZINC PLATING
P502020	3	3.124	1.310	0.280	0.059	ZINC PLATING
P502022	–	–	–	–	–	–
P502026	1	2.448	1.139	0.250	0.074	PLAIN
P502027	1	2.448	1.139	0.250	0.074	ZINC PLATING
P502028	1	2.448	1.139	0.250	0.074	ZINC YELLOW PLATING
P502030	3	2.333	1.250	0.420	0.032	ZINC PLATING
P502031	3	3.124	1.310	0.375	0.059	ZINC PLATING
P502032	3	1.960	0.980	0.380	0.059	ZINC PLATING
P502035	2	1.988	1.160	0.380	0.032	ZINC PLATING
P502036	1	1.975	0.967	0.313	0.059	PLAIN
P502037	1	1.975	0.967	0.313	0.059	ZINC PLATING
P502039	1	3.157	1.790	0.410	0.059	ZINC PLATING

PART NO.	STYLE	DIM A	DIM B	DIM C	DIM D	FINISH
P502041	4	6.250	1.910	4.340	0.1046	PLAIN
P502042	1	1.784	0.952	0.313	0.059	PLAIN
P502043	1	1.784	0.952	0.313	0.059	ZINC PLATING
P502044	3	2.503	0.940	0.410	0.074	PLAIN
P502045	3	2.503	0.940	0.410	0.074	ZINC PLATING
P502046	1	3.378	1.813	0.313	0.036	PLAIN
P502047	1	2.722	1.440	0.312	0.036	ZINC PLATING
P502048	3	2.719	0.937	0.438	0.074	PLAIN
P502049	3	2.719	0.937	0.438	0.074	ZINC PLATING
P502050	1	3.951	2.090	0.312	0.074	PLAIN
P502051	2	1.942	1.395	0.281	0.059	PLAIN
P502052	2	1.942	1.395	0.281	0.059	ZINC PLATING
P502053	2	3.355	1.640	0.563	0.036	PLAIN
P502055	2	1.983	1.016	0.313	0.059	PLAIN
P502056	3	2.333	1.204	0.420	0.074	PLAIN
P502059	1	2.448	1.140	0.250	0.074	PLAIN
P502067	3	2.333	1.190	0.420	0.074	ZINC PLATING
P502079	2	1.990	1.200	0.310	0.032	ZINC PLATING
P502080	1	2.722	1.440	0.320	0.036	ZINC YELLOW PLATING
P502081	3	2.719	0.937	0.438	0.074	BLACK PHOSPHATE
P502082	3	1.986	0.910	0.383	0.059	ZINC PLATING
P502083	4	4.500	1.813	0.750	0.105	N/A

Style 3

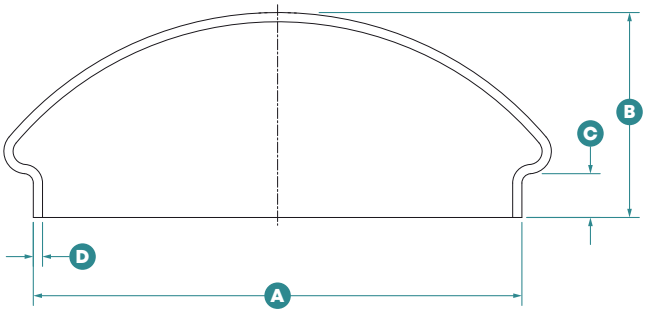

Style 4

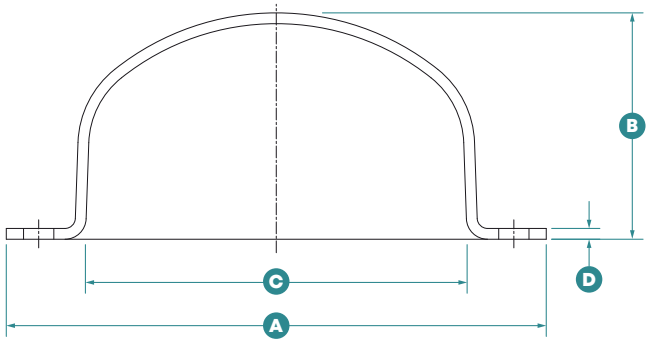

PART NO.	STYLE	DIM A	DIM B	DIM C	DIM D	FINISH
P502084	3	3.156	1.375	0.280	0.064	PLAIN
P502086	2	3.355	1.640	0.563	0.0359	ZINC PLATING
P502089	3	3.156	1.380	0.280	0.064	BLACK OXIDE
P502091	3	3.156	1.380	0.280	0.064	ZINC PLATING
P502092	1	3.951	2.090	0.312	0.074	ZINC PLATING
P502098	2	1.983	1.016	0.313	0.059	ZINC YELLOW PLATING
P502101	3	2.503	0.940	0.410	0.074	ZINC YELLOW PLATING
P502103	4	8.850	2.750	5.750	0.105	ZINC PLATING
P502104	4	3.875	1.000	2.844	0.1046	N/A
P502106	4	5.750	1.750	3.670	0.1046	PLAIN
P502107	4	4.630	1.250	1.250	0.1046	PLAIN
P502108	4	4.630	1.250	1.250	0.1046	PLAIN
P502109	4	6.250	2.620	2.620	0.125	ZINC PLATING
P502113	4	8.850	2.750	5.750	0.105	ZINC PLATING
P502114	4	3.875	1.000	2.844	0.1046	PLAIN
P502118	1	4.260	2.250	0.380	0.0598	PLAIN
P502119	4	5.750	2.027	4.000	–	N/A
P502120	4	6.250	2.690	4.390	–	N/A
P502121	–	4.000	3.185	2.950	–	N/A
P502123	4	10.000	2.000	7.500	0.1046	PLAIN
P502124	2	1.582	0.506	0.250	0.039	ZINC PLATING
P502125	4	4.000	1.500	2.690	0.0747	PLAIN

PART NO.	STYLE	DIM A	DIM B	DIM C	DIM D	FINISH
P502131	–	3.260	1.600	1.480	–	N/A
P502132	3	2.843	0.500	0.375	0.0598	ZINC PLATING
P502135	4	5.750	1.688	3.750	0.1046	PLAIN
P502136	4	6.250	2.620	4.590	0.125	PLAIN
P502138	3	2.358	0.500	0.375	0.0747	ZINC PLATING
P502142	4	6.250	1.772	4.250	0.1047	PLAIN
P502145	2	2.251	1.260	0.225	0.039	ZINC PLATING
P502148	–	2.485	0.250	0.250	0.039	ZINC PLATING
P502152	2	2.446	1.340	0.313	0.0359	ZINC YELLOW PLATING
P502153	3	1.785	0.690	0.370	0.032	ZINC PLATING
P502154	1	3.157	1.772	0.410	0.0598	PLAIN
P502162	3	2.840	1.004	0.374	0.0598	PLAIN
P502167	4	6.398	1.772	4.330	–	PLAIN
P502168	4	5.000	1.750	4.053	0.060	N/A
P502170	4	4.685	1.240	3.150	0.060	N/A
P502171	4	4.685	1.560	3.026	–	N/A
P502177	3	3.156	1.375	0.280	0.660	ZINC YELLOW PLATING
P502180	2	3.270	1.289	0.375	0.039	ZINC PLATING

Bearing Cups

Bearing Cups – Technical Information

PART NO.	INDUSTRY CUP NO.	VENDOR	CUP O.D.
P702201	25520	PEER	3.265
P702202	3720	PEER	3.672
P702203	LM67010	PEER	2.328
P702204	LM501310	PEER	2.891
P702205	25821	PEER	2.875
P702206	JL69310	PEER	2.480
P702207	LM48510	PEER	2.563
P702208	LM603011	PEER	3.063
P702209	2720	PEER	3.000
P702210	LM11910	PEER	1.781
P702213	JLM506810	PEER	3.543
P702214	L68111	PEER	2.361
P702216	14276	PEER	2.717
P702217	382A	PEER	3.813
P702218	LM11710	PEER	1.570
P702219	13621	PEER	2.717
P702224	HM212011	TIMKEN	4.813
P702225	33462	TIMKEN	4.625
P702228	25520	TIMKEN	3.265
P702229	15245	KOYO	2.441
P702230	HM218210	TIMKEN	3.542
P702231	453A	TIMKEN	4.250
P702233	25821	TIMKEN	2.875
P702234	3720	TIMKEN	3.672
P702235	JL69310	TIMKEN	2.480
P702236	2720	TIMKEN	3.000
P702237	LM67010	TIMKEN	2.328
P702238	LM501310	KOYO	2.891

PART NO.	INDUSTRY CUP NO.	VENDOR	CUP O.D.
P702239	25520	KOYO	3.265
P702243	JLM506810	TIMKEN	3.543
P702246	LM11910	KOYO	1.781
P702248	LM501310	TIMKEN	2.891
P702249	LM603011	TIMKEN	3.063
P702250	382A	TIMKEN	3.813
P702251	LM48510	TIMKEN	2.563
P702252	39412	TIMKEN	4.125
P702253	382A	KOYO	3.813
P702256	28920	TIMKEN	4.000
P702257	13621	KOYO	2.717
P702259	14274	KOYO	2.717
P702260	14276	KOYO	2.717
P702261	14276	TIMKEN	2.717
P702264	25821	KOYO	2.875
P702265	2420	KOYO	2.688
P702266	24720	KOYO	3.000
P702267	24720	TIMKEN	3.000
P702268	25521	KOYO	3.270
P702270	2720	KOYO	3.000
P702272	332	KOYO	3.150
P702274	33462	KOYO	4.625
P702275	3525	KOYO	3.438
P702277	3720	KOYO	3.672
P702279	3920	KOYO	4.438
P702280	39520	TIMKEN	4.438
P702281	453A	KOYO	4.250
P702282	47620	KOYO	5.250

PART NO.	INDUSTRY CUP NO.	VENDOR	CUP O.D.
P702290	HM212011	PEER	4.813
P702295	JLM104910	TIMKEN	3.228
P702296	39520	KOYO	4.438
P702297	JLM506810	KOYO	3.543
P702300	L44610	KOYO	1.980
P702302	L44610	PEER	1.980
P702304	LM104911A	TIMKEN	3.250
P702308	LM48510	KOYO	2.563
P702309	LM603011	KOYO	3.063
P702311	M12610	KOYO	1.969
P702312	M88010	KOYO	2.688
P702315	LM29710	PEER	2.563
P702316	15245	PEER	2.441
P702318	JLM104910	PEER	3.228
P702319	39520	PEER	4.438
P702320	39412	PEER	4.125
P702323	33462	PEER	4.625
P702329	453A	PEER	4.250
P702330	HM218210	PEER	3.542
P702332	332	PEER	3.150
P702335	LM67010	KOYO	2.328
P702336	JL69310	KOYO	2.480
P702339	25521	TIMKEN	3.270
P702344	653	TIMKEN	5.750
P702347	71750	TIMKEN	7.500
P702353	HM212011	HL	4.813
P702355	LM67010	HL	2.328
P702356	LM501310	HL	2.891

PART NO.	INDUSTRY CUP NO.	VENDOR	CUP O.D.
P702358	JL69310	HL	2.480
P702364	L68111	HL	2.361
P702365	HM218210	HL	3.542
P702367	JLM506810	HL	3.543
P702368	39520	HL	4.438
P702369	832	TIMKEN	6.625
P702370	15250	PEER	2.500
P702372	792	TIMKEN	8.125
P702373	25520	NTN	3.265
P702374	25821	NTN	2.875
P702375	HH221410	TIMKEN	7.500
P702377	74850	TIMKEN	8.500
P702381	2735X	KOYO	2.875
P702384	832-T2	PEER	6.625
P702385	932-T2	PEER	8.375
P702386	Y33215-T2	PEER	5.118
P702387	Y33118-T2	PEER	5.906
P702393	33462	NTN	4.625
P702396	792	NTN	8.125
P702397	832	NTN	6.625
P702398	71750	NTN	7.500
P702399	653	NTN	5.750
P702401	28921	TIMKEN	3.937
P702402	LM104912	NTN	3.265
P702403	74850	NTN	8.500
P702404	HH221410	ILJIN	7.500

Bearing Cup

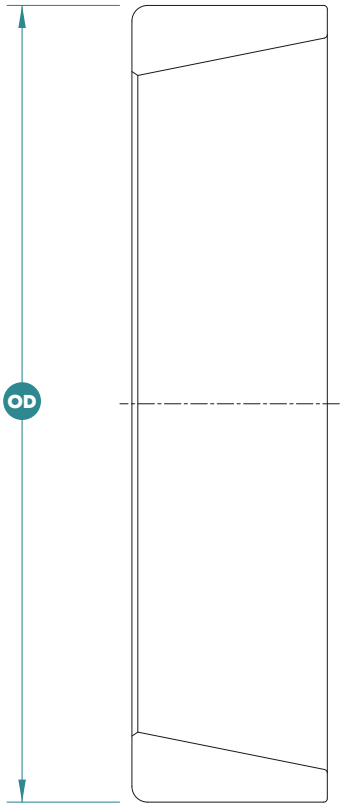

(Cup OD)

Bearing Cones

Bearing Cones – Technical Information

PART NO.	INDUSTRY CONE NO.	VENDOR	CONE I.D.
P752301	JL69349	PEER	1.4961
P752302	LM104949	PEER	2.0000
P752303	25590	PEER	1.7960
P752304	2790	PEER	1.3125
P752305	LM11949	PEER	0.7500
P752306	LM501349	PEER	1.6250
P752307	LM603049	PEER	1.7812
P752308	25877	PEER	1.3750
P752309	3780	PEER	2.0000
P752310	LM48548	PEER	1.3750
P752311	LM67048	PEER	1.2500
P752312	JLM506849	PEER	2.1654
P752313	LM29749	PEER	1.5000
P752314	L44649	PEER	1.0625
P752315	L68149	PEER	1.3775
P752316	L44643	PEER	1.0000
P752318	14136A	PEER	1.3750
P752320	387AS	PEER	2.2500
P752321	LM11749	PEER	0.6875
P752322	13600LA	TIMKEN	1.5000
P752323	LM67000LA	TIMKEN	1.2500
P752324	HM218248	TIMKEN	5.7864
P752325	460	TIMKEN	1.7500
P752326	25877	TIMKEN	1.3750
P752330	HM212049	TIMKEN	2.6250
P752331	33275	TIMKEN	2.7500
P752332	39585	TIMKEN	2.5000
P752333	25590	TIMKEN	1.7960
P752334	3780	TIMKEN	2.0000
P752335	JL69349	TIMKEN	1.4961

PART NO.	INDUSTRY CONE NO.	VENDOR	CONE I.D.
P752337	LM501349	KOYO	1.6250
P752338	LM501349	TIMKEN	1.6250
P752339	LM67048	TIMKEN	1.2500
P752340	2790	TIMKEN	1.3125
P752342	25877	KOYO	1.3750
P752345	LM11949	KOYO	0.7500
P752347	JLM506849	TIMKEN	2.1654
P752348	LM603049	TIMKEN	1.7812
P752349	387AS	TIMKEN	2.2500
P752350	24780	TIMKEN	1.6250
P752351	JLM506849	KOYO	2.1654
P752353	LM48548	KOYO	1.3750
P752354	39250	TIMKEN	2.5000
P752356	387AS	KOYO	2.2500
P752360	14136A	KOYO	1.3750
P752361	14137A	KOYO	1.3750
P752362	14138A	KOYO	1.3750
P752363	15123	KOYO	1.2500
P752364	15125	KOYO	1.2500
P752366	24780	KOYO	1.6250
P752372	2790	KOYO	1.3125
P752373	2793	TIMKEN	1.3750
P752374	2796	PEER	1.3750
P752376	33275	KOYO	2.7500
P752377	342A	KOYO	1.6250
P752379	3585	KOYO	1.6250
P752381	3780	KOYO	2.0000
P752383	39581	KOYO	2.2500
P752384	39585	KOYO	2.5000
P752386	39590	KOYO	2.6250

PART NO.	INDUSTRY CONE NO.	VENDOR	CONE I.D.
P752387	3979	KOYO	2.2500
P752388	3984	KOYO	2.6250
P752392	47687	KOYO	3.2500
P752397	HM212049	KOYO	2.6250
P752399	HM218248	KOYO	5.7864
P752403	JLM104948	TIMKEN	1.9685
P752405	25580	PEER	1.7500
P752406	HM218248	PEER	5.7864
P752407	JLM508748	TIMKEN	2.3622
P752408	L44643	KOYO	1.0000
P752411	L44649	KOYO	1.0625
P752415	LM29749	TIMKEN	1.5000
P752417	14125A	PEER	1.2500
P752419	LM603049	KOYO	1.7812
P752424	25590	KOYO	1.7960
P752428	HM212049	PEER	2.6250
P752430	39250	PEER	2.5000
P752433	39590	PEER	2.6250
P752434	33275	PEER	2.7500
P752437	460	PEER	1.7500
P752439	39585	PEER	2.5000
P752442	LM67048	KOYO	1.2500
P752443	JL69349	KOYO	1.4961
P752447	469	TIMKEN	2.2500
P752451	663	TIMKEN	3.2500
P752454	71455	TIMKEN	4.5310
P752457	JL69349	HL	1.4961
P752459	LM501349	HL	1.6250
P752462	LM67048	HL	1.2500
P752463	JLM506849	HL	2.1654

PART NO.	INDUSTRY CONE NO.	VENDOR	CONE I.D.
P752466	L44643	HL	1.0000
P752473	842	TIMKEN	3.2500
P752474	15126	PEER	1.2500
P752476	795	TIMKEN	4.7500
P752478	HH221449	TIMKEN	4.0000
P752479	13600LA	PEER	1.5000
P752480	74550A	TIMKEN	5.5000
P752486	28995	TIMKEN	2.4700
P752487	342-S	TIMKEN	1.6880
P752488	842XT-T2	PEER	3.2500
P752489	938XT-T2	PEER	4.5000
P752491	X33215XT-T2	PEER	2.9528
P752492	X33118XT-T2	PEER	3.5433
P752494	33287	TIMKEN	2.8750
P752498	39585	NTN	2.5000
P752499	460	NTN	1.7500
P752503	795	NTN	4.7500
P752504	842	NTN	3.2500
P752506	25580L-LATX	PEER	1.7500
P752507	71455	NTN	4.5310
P752508	663	NTN	3.2500
P752509	HM212049	HL	2.6250
P752510	HM218248	HL	5.7864
P752513	25580	TIMKEN	1.7500
P752514	74550A	NTN	5.5000
P752518	HH221449	ILJIN	4.0000

Bearing Cone

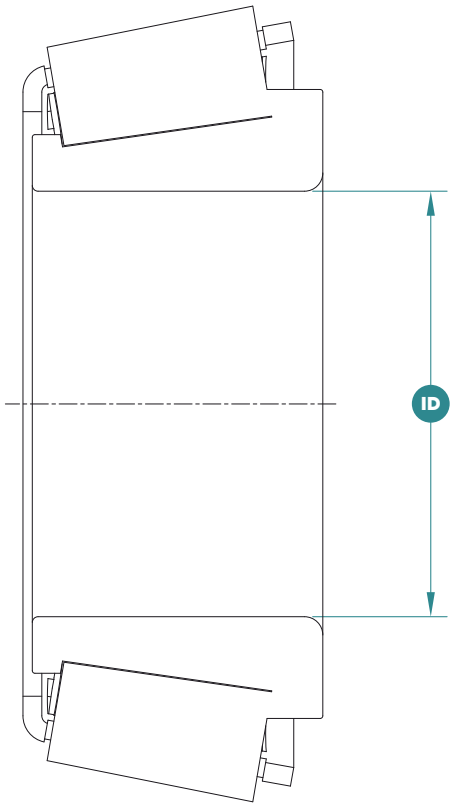

(Cone ID)

Seals

Seals – Technical Information

PART NO.	VENDOR NO.	DIM A	DIM B	DIM C	LIP STYLE
P602101	CR26260/TC263622VH-H	2.625	3.623	0.250	SINGLE LIP
P602102	CR15190/POS1502625VH/TC152622VH-H	1.500	2.623	0.250	SINGLE LIP
P602103	CR16289/POS1622543VHY/TC162564VHY	1.625	2.562	0.438	SINGLE LIP
P602104	CR20148/POS2003625VH/TC203622VH-H	2.000	3.623	0.250	SINGLE LIP
P602105	CR16069/POS16223243VHY/TC162334VHY	1.625	2.328	0.438	SINGLE LIP
P602106	CR17617/POS1752735VHY/TC17273VHY	1.750	2.718	0.359	SINGLE LIP
P602109	CR18823/POS1873025VH/TC18302VH-H	1.875	3.000	0.250	SINGLE LIP
P602110	CR20125/POS2003343TA/TC20334TA-H	2.000	3.371	0.438	DOUBLE LIP SPRING LOADED
P602111	CR14974/TC15235VHY	1.500	2.328	0.500	SINGLE LIP
P602114	CR20044/TC203062VH-H	2.000	3.061	0.250	SINGLE LIP
P602115	CR22392/POS2253025VH/TC223062VHY	2.250	3.061	0.250	SINGLE LIP
P602116	CR27394/POS2753725VH/TC27372VHY	2.750	3.751	0.250	SINGLE LIP
P602117	CR17144/POS1712550TB/TC171255TB	1.719	2.561	0.500	DOUBLE LIP SPRING LOAD
P602119	CR22368/TC22302VHY	2.250	3.000	0.250	SINGLE LIP
P602121	CR20059/TC203065TA	2.000	3.061	0.500	DOUBLE LIP SPRING LOADED
P602122	CR29968/POS3004025VH/TC304002VH-H	3.000	4.003	0.250	SINGLE LIP
P602123	CR12411/POS1251940VHY/TC12194VHY	1.250	1.979	0.406	SINGLE LIP
P602134	CR27565/POS2754043TA-CSP/TC27404PTA-H	2.750	4.003	0.438	DOUBLE LIP SPRING LOADED
P602137	CR14977/POS1502350TB/TC15235TB	1.500	2.328	0.500	DOUBLE LIP SPRING LOADED
P602139	CR21208/POS21230625VH-S/TC213062VHY	2.125	3.061	0.250	SINGLE LIP
P602141	CR27362/POS/TC27374TB-H	2.750	3.751	0.438	DOUBLE LIP SPRING LOADED
P602144	CR16290/POS16225631TB-V-S/TC1625631VTB-H	1.625	2.562	0.313	–
P602145	CR28751/TC28382VH	2.875	3.876	0.250	SINGLE LIP
P602147	CR17146/POS17125650VHY/TC1712565VHY-H	1.719	2.562	0.500	SINGLE LIP
P602148	CR22532/POS2253343TA/TC22334TA-H	2.250	3.371	0.438	DOUBLE LIP SPRING LOADED
P602149	CR14975/POS1502339VHY/TC15233VHY	1.500	2.328	0.390	SINGLE LIP
P602195	CR24904/POS2503225VH/TC253252VH-H	2.500	3.251	0.250	SINGLE LIP
P602204	CR22354/POS22530037TB-S/TC22303TB-H	2.250	3.000	0.375	DOUBLE LIP SPRING LOADED
P602222	CR16322/TC16262VHY	1.625	2.623	0.250	SINGLE LIP
P602224	CR27370/POS2753743TA-S/TC27374TA-H	2.750	3.751	0.438	DOUBLE LIP SPRING LOADED
P602231	CR12124/POS1211940VB-S/TC12119740VL-H	1.219	1.979	0.406	DOUBLE LIP SPRING LOADED
P602233	CR22870/TC229313VHY	2.297	3.148	0.359	SINGLE LIP
P602234	CR12437/POS12519825VH/TC121982VH-H	1.250	1.983	0.250	SINGLE LIP
P602240	CR15190	1.500	2.623	0.250	SINGLE LIP
P602248	POS1873031TB/TC183003TB-H	1.875	3.000	0.313	DOUBLE LIP SPRING LOADED
P602252	CR17413/TC175253TB-H	1.750	2.565	0.313	–
P602287	POS2253037TB/TC223063TB-H	2.250	3.061	0.375	DOUBLE LIP SPRING LOADED
P602297	CR16289	1.625	2.562	0.438	–
P602301	CR24904	2.500	3.251	0.250	–
P602302	CR27394	2.750	3.751	0.250	SINGLE LIP
P602303	CR14975	1.500	2.328	0.390	SINGLE LIP
P602305	CR16322	1.625	2.623	0.250	SINGLE LIP
P602308	CR20148/POS2003625VH/TC203622VH-H	2.000	3.622	0.250	SINGLE LIP
P602310	CR12437	1.250	1.983	0.250	–

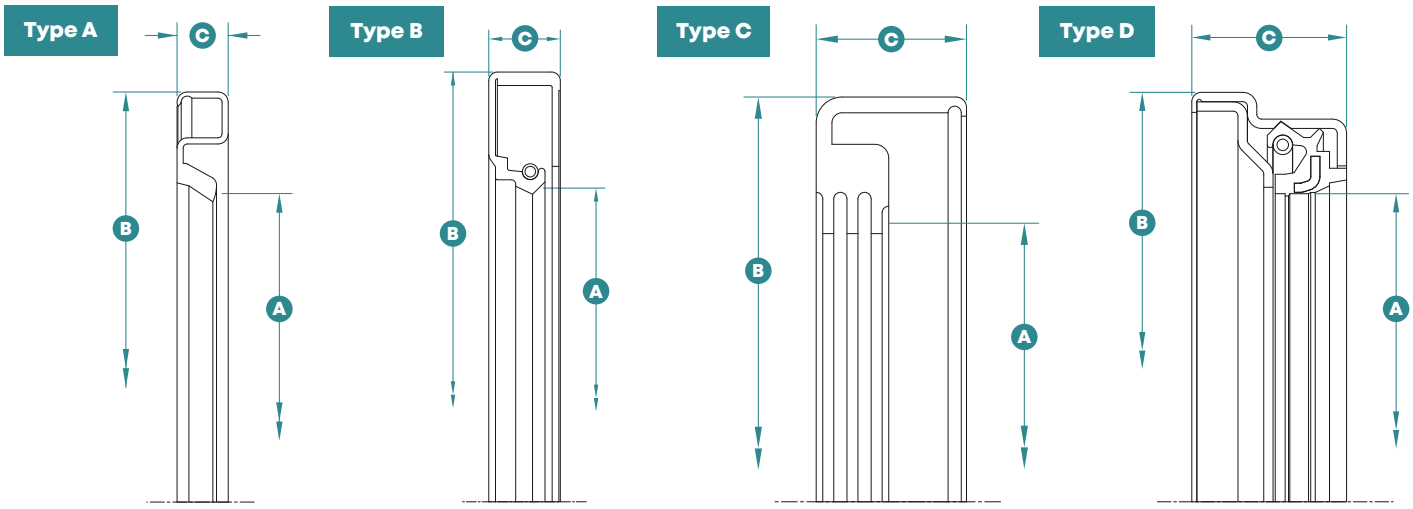

PART NO.	VENDOR NO.	DIM A	DIM B	DIM C	LIP STYLE
P602313	CR18823	1.875	3.000	0.250	SINGLE LIP
P602315	CR27362	2.750	3.751	0.438	DOUBLE LIP SPRING LOADED
P602319	CR29968	3.000	4.003	0.250	SINGLE LIP
P602325	TC25374TA	2.500	3.751	0.438	DOUBLE LIP SPRING LOADED
P602327	CR518034	1.875	2.561	0.453	DOUBLE LIP
P602332	CR50195/POS5007550TA/TC50755TA-H	5.000	7.500	0.500	DOUBLE LIP SPRING LOADED
P602333	POS4507550TA/TC45755TA	4.500	7.500	0.500	DOUBLE LIP SPRING LOADED
P602336	–	6.250	8.500	0.500	SINGLE LIP SPRING LOADED
P602342	CR25075/TC25363TB-H	2.500	3.623	0.375	DOUBLE LIP SPRING LOADED
P602344	TC30414TA-H	3.000	4.125	0.437	DOUBLE LIP SPRING LOADED
P602347	POS2873737TA/TC28373TA	2.875	3.751	0.375	DOUBLE LIP SPRING LOADED
P602364	-	2.750	3.750	0.300	CARTRIDGE
P602378	TC55836TA-H	5.500	8.375	0.625	SINGLE LIP
P602398	TC30452VH-H	3.000	4.500	0.250	SINGLE LIP
P602407	CR28425/POS2843950TB-5/TC2843935TB-H	2.844	3.939	0.500	DOUBLE LIP SPRING LOADED
P602436	–	4.375	6.000	0.500	–
P602439	–	–	–	–	–
P602440	–	–	–	–	–
P602441	–	–	–	–	–
P602442	–	–	–	–	–
P602457	–	–	–	–	–
P602460	–	–	–	–	–
P602461	–	–	–	–	–

Wear Sleeves

Wear Sleeve – Technical Information

PART NO.	DESCRIPTION
P912901	WEARSLEEVE CR B107175
P912902	WEARSLEEVE JV-1166
P912903	WEARSLEEVE CR MOD 826
P912904	WEARSLEEVE CR 086585
P912905	WEARSLEEVE CR 079941
P912906	WEARSLEEVE-NILO RINGE #25590
P912907	WEARSLEEVE 2.570
P912909	WEARSLEEVE CR 79941
P912912	TRACK SEAL RING
P912913	WEAR SLEEVE
P912914	WEARSLEEVE CR B107175 ONLY

Wear Sleeve

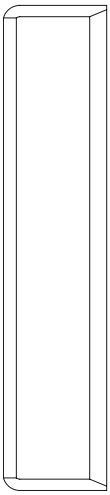

Cotter Pins

Cotter Pins – Technical Information

PART NO.	TYPE	NOM. SIZE	DIM A	DIM B	DIM C
P401928	COTTER PIN	5/16	4.00	0.312	0.680
P401929	COTTER PIN	7/32	3.00	0.218	0.510
P401930	COTTER PIN	5mm	50mm	5mm	8mm
P401932	COTTER PIN	3/8	4.00	0.332	0.750
P401933	SPRING PIN	3/8	4.00	0.395	–
P401934	COTTER PIN	5/32	1-1/2	0.150	0.310
P401935	COTTER PIN	1/4	2.00	2.225	0.500
P401936	COTTER PIN	1/8	2.00	0.120	0.250
P401937	COTTER PIN	3/16	2.00	0.176	0.380
P401940	COTTER PIN	5mm	50mm	5mm	8mm
P401942	SPRING PIN	3/8	2-1/2	0.395	–
P401946	SPRING PIN	3/8	3-1/2	0.395	–
P401951	SPRING PIN	1/4	2.00	0.261	–

Cotter Pins

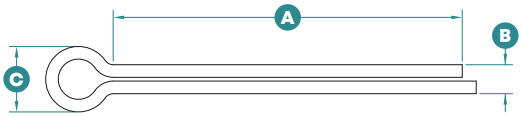

Spring Pins

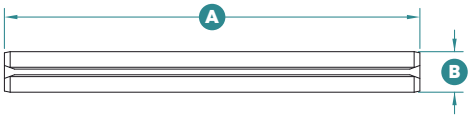

Wheel Bolts

Wheel Bolts – Technical Information

PART NO.	DESCRIPTION	THREAD (IN)	A (IN)	B (IN)	C	PLATING	GRADE
P101301	LUG BOLT	1/2-20 UNF	0.750	1	90	ZINC PLATING	GRADE 5
P101302	LUG BOLT	1/2-20 UNF	0.938	29/32	60	ZINC PLATING	GRADE 5
P101303	LUG BOLT	9/16-18 UNF	0.875	1-1/8	90	ZINC PLATING	GRADE 5
P101304	LUG BOLT	5/8-18 UNF	0.938	1-3/8	90	ZINC PLATING	GRADE 5
P101305	LUG BOLT	9/16-18 UNF	0.875	1-1/2	90	ZINC PLATING	GRADE 5
P101307	LUG BOLT	1/2-20 UNF	0.812	1-3/4	90	ZINC PLATING	GRADE 5
P101308	LUG BOLT	1/2-20 UNF	0.812	1-1/4	90	ZINC PLATING	GRADE 5
P101319	LUG BOLT	5/8-18 UNF	0.938	1-3/8	90	ZPH	GRADE 5
P101322	LUG BOLT	7/16-20 UNF	0.625	3/4	75	ZINC PLATING	GRADE 5
P101325	LUG BOLT	1/2-20 UNF	0.812	1-1/4	90	ZINC YELLOW PLATING	GRADE 5
P101327	LUG BOLT	1/2-20 UNF	0.750	1-3/8	90	ZINC PLATING	GRADE 5
P101329	LUG BOLT	9/16-18 UNF	0..875	2	90	ZINC PLATING	GRADE 5
P101330	LUG BOLT	1/2-20 UNF	0.812	1	90	ZINC PLATING	GRADE 5
P101331	LUG BOLT	5/8-18 UNF	0.938	1-3/4	90	ZPH	GRADE 5
P101335	LUG BOLT	9/16-18 UNF	0.875	7/8	90	ZINC YELLOW PLATING	GRADE 5
P101336	LUG BOLT	1/2-20 UNF	0.812	3/4	90	ZINC PLATING	GRADE 5
P101338	LUG BOLT	9/16-18 UNF	0.875	1-1/8	90	ZINC PLATING	GRADE 5
P101340	LUG BOLT	9/16-18 UNF	0.875	1-1/4	90	ZINC PLATING	GRADE 5
P101341	LUG BOLT	5/8-18 UNF	0.938	3	90	ZINC PLATING	GRADE 5
P101342	LUG BOLT	1/2-20 UNF	0.750	1-1/4	90	ZINC PLATING	GRADE 5

Flange Bolt

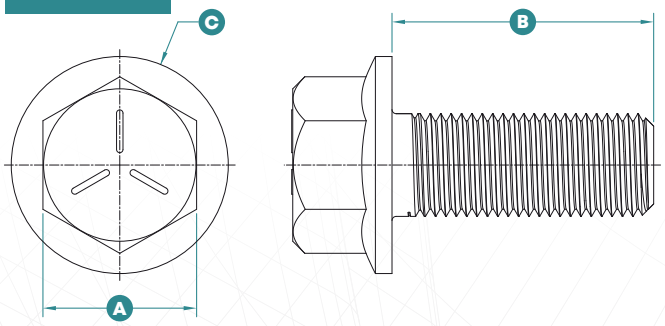

Lug Bolt

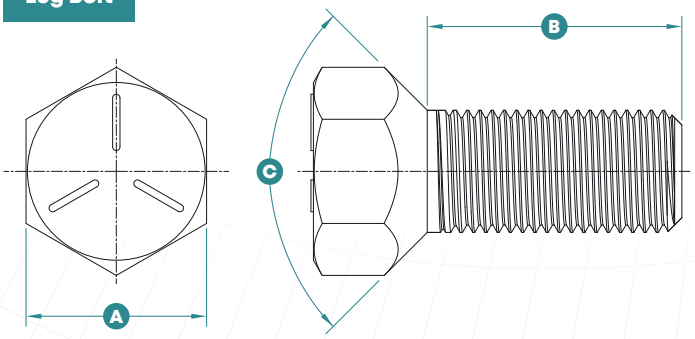

Stud Bolts

Stud Bolts – Technical Information

PART NO.	THREAD (IN)	A (IN)	B (IN)	C (IN)	PLATING	GRADE
P151401	1/2-20 UNF	1.875	0.360	0.615	BLACK	GRADE 5
P151402	5/8-18 UNF	2.250	0.557	0.682	P&O	GRADE 5
P151403	9/16-18 UNF	2.125	0.715	0.615	BLACK	GRADE 5
P151407	5/8-18 UNF	2.500	0.870	0.682	ZPO	GRADE 8
P151409	3/4-16 UNF	2.750	0.560	1.006	BLACK	GRADE 8
P151411	7/16-20 UNF	1.875	0.750	0.484	BLACK	GRADE 5
P151414	9/16-18 UNF	2.500	1.090	0.615	BLACK	GRADE 5
P151420	1/2-20 UNF	1.625	0.361	0.615	BLACK	GRADE 5
P151421	1/2-20 UNF	1.875	0.560	0.615	ZINC YELLOW PLATING	GRADE 5
P151422	1/2-20 UNF	1.875	0.560	0.540	ZINC PLATING	GRADE 5
P151423	1/2-20 UNF	1.875	0.560	0.540	BLACK	GRADE 5
P151424	1/2-20 UNF	1.875	0.355	0.615	ZINC PLATING	GRADE 5
P151426	1/2-20 UNF	2.125	0.355	0.615	BLACK	GRADE 5
P151427	1/2-20 UNF	2.125	0.500	0.615	ZINC PLATING	GRADE 5
P151428	1/2-20 UNF	2.125	0.500	0.540	ZINC PLATING	GRADE 5
P151429	1/2-20 UNF	2.125	0.560	0.540	BLACK	GRADE 5
P151430	1/2-20 UNF	2.125	0.355	0.615	ZINC YELLOW PLATING	GRADE 5
P151431	9/16-18 UNF	2.125	0.720	0.615	ZINC PLATING	GRADE 8
P151432	9/16-18 UNF	2.125	0.560	0.615	ZINC PLATING	GRADE 8
P151433	9/16-18 UNF	2.312	0.840	0.615	PLAIN	-
P151434	5/8-18 UNF	2.500	0.840	0.682	BLACK	GRADE 8
P151436	5/8-18 UNF	2.250	0.560	0.682	ZINC YELLOW PLATING	GRADE 5
P151437	5/8-18 UNF	2.375	0.720	0.688	ZINC YELLOW PLATING	GRADE 8
P151439	5/8-18 UNF	2.500	0.840	0.682	PLAIN	GRADE 8

PART NO.	THREAD (IN)	A (IN)	B (IN)	C (IN)	PLATING	GRADE
P151443	3/4-16 UNF	3.875	0.437	1.015	BLACK	GRADE 8
P151447	1/2-20 UNF	1.875	0.560	0.540	ZINC YELLOW PLATING	
P151448	1/2-20 UNF	1.875	0.355	0.615	ZINC PLATING	GRADE 5
P151449	1/2-20 UNF	1.875	0.560	0.615	BLACK	GRADE 5
P151451	5/8-18 UNF	2.500	0.870	0.682	ZINC YELLOW PLATING	GRADE 8
P151455	3/4-16 UNF	2.880	0.550	0.815	BLACK	GRADE 8
P151456	9/16-18 UNF	1.880	0.600	0.615	PLAIN	GRADE 8
P151457	5/8-18 UNF	2.250	0.557	0.682	ZINC PLATING	GRADE 5
P151458	1/2-20 UNF	1.875	0.560	0.615	ZINC PLATING	GRADE 5
P151464	5/8-18 UNF	2.750	0.870	0.682	PLAIN	GRADE 8
P151465	5/8-18 UNF	2.250	0.870	0.682	PLAIN	GRADE 5
P151467	9/16-18 UNF	2.250	0.560	0.615	BLACK	GRADE 8
P151469	1/2-20 UNF	1.875	0.560	0.615	BLACK	GRADE 8
P151472	M22X1.5	3.690	0.440	1.015	P&O	CLASS 10.9
P151474	M20X1.5	3.230	0.570	0.864	P&O	CLASS 10.9
P151477	M18X1.5	2.780	0.570	0.864	P&O	CLASS 10.9
P151479	M22X1.5	4.650	0.390	0.950	P&O	CLASS 10.9
P151482	1/2-20 UNF	2.125	0.500	0.615	ZINC YELLOW PLATING	GRADE 8
P151488	M22X1.5	4.134	1.000	0.952	P&O	CLASS 10.9
P151491	1/2-20 UNF	2.125	0.500	0.615	ZINC PLATING	GRADE 8
P151494	M22X1.5	4.094	0.500	0.952	P&O	CLASS 10.9

Stud Bolt

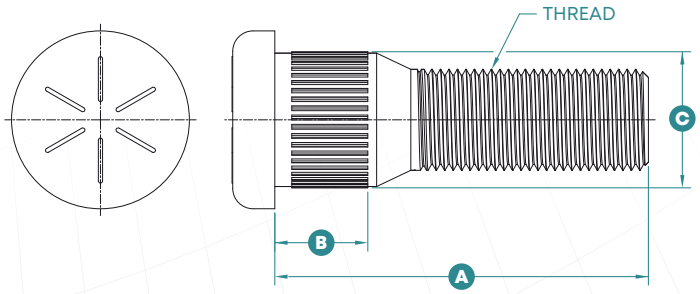

Hex Bolts

Hex Bolts – Technical Information

PART NO.	BOLT TYPE	THREAD SIZE	BOLT LENGTH	GRADE	PLATING
P251701	5/8-18 UNF	0.937	0.547	GRADE 2	PLAIN
P251702	1 1/4-12 UNF	1.875	1.094	GRADE 2	PLAIN
P251703	3/4-16 UNF	1.125	0.625	GRADE 2	PLAIN
P251706	1-14 UNS	1.500	0.875	GRADE 2	PLAIN
P251710	1 1/4-12 UNF	1.875	1.063	GRADE 2	ZINC YELLOW PLATING
P251711	1 3/4-12 UN	2.750	1.250	GRADE 5	ZPO
P251712	3/4-16 UNF	1.125	0.422	GRADE 5	PLAIN
P251715	7/8-14 UNF	1.312	0.484	GRADE 2	PLAIN
P251717	1 1/8-12 UNF	1.688	0.999	GRADE 5	PLAIN
P251719	1-14 UNS	1.500	0.563	GRADE 2	PLAIN
P251720	1 1/2-12 UNF	2.187	1.250	GRADE 2	PLAIN
P251721	7/8-14 UNF	1.312	0.75	GRADE 2	PLAIN
P251722	1 1/4-12 UNF	1.875	1.25	GRADE 5	PLAIN
P251723	2-12 UN	3.125	1.25	GRADE 5	PLAIN
P251725	1-14 UNS	1.438	0.625	GRADE 2	PLAIN
P251727	2-12 UN	3.000	1.125	GRADE 5	PLAIN
P251728	1 3/4-12 UN	2.750	1.00	GRADE 2	ZINC YELLOW PLATING
P251729	1 3/4-12 UN	2.750	1.875	GRADE 2	ZINC YELLOW PLATING
P251733	2 1/2-12 UN	3.750	1.188	GRADE 5	PLAIN
P251735	1-14 UNS	1.500	0.875	GRADE 5	ZINC YELLOW PLATING
P251736	5/8-18 UNF	0.938	0.563	GRADE 5	ZINC PLATING
P251737	7/8-14 UNF	1.312	0.750	GRADE 5	ZINC PLATING
P251738	1 3/8-12 UNF	2.000	0.781	GRADE 5	PLAIN
P251740	1 1/4-12 UNF	1.875	0.75	GRADE 5	ZINC PLATING
P251742	3-12 UN	4.625	1.763	GRADE 5	ZINC PLATING
P251743	1 1/2-12 UNF	2.500	0.88	GRADE 5	ZINC YELLOW PLATING
P251745	3/4-16 UNF	1.125	0.665	GRADE 5	ZINC YELLOW PLATING
P251748	1 1/8-12 UNF	1.688	0.999	GRADE 5	ZINC YELLOW PLATING
P251749	2-12 UN	3.125	1.169	GRADE 5	ZINC PLATING
P251750	130 X 12	6.500	1.417	–	BLACK
P251751	1 1/4-12 UNF	1.875	1.094	GRADE 5	PLAIN
P251753	1 3/4-12 UN	2.750	1	GRADE 5	ZINC PLATING
P251757	1-14 UNS	1.500	0.875	GRADE 5	ZINC PLATING
P251758	1-14 UNS	1.500	0.563	GRADE 5	ZINC PLATING
P251760	1 1/2-12 UNF	2.250	1.317	GRADE 5	PLAIN
P251761	3 1/4-12 UNF	5.250	0.875	–	ZINC PLATING
P251762	1 1/2-12 UNF	3.375	0.875	–	PLAIN
P251763	2 5/8-12 UNF	4.200	0.858	–	ZINC PLATING
P251764	3/4-16 UNF	1.125	0.665	GRADE 5	ZINC PLATING
P251766	1 1/4-12 UNF	1.875	0.751	GRADE 5	PLAIN

Hex Bolt

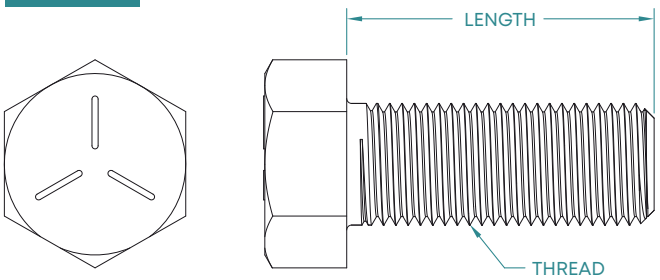

Spindle Nuts

Spindle Nuts – Technical Informationn

PART NO.	THREAD SIZE	STYLE	DIM A	DIM B	GRADE	FINISH
P251701	5/8-18 UNF	SLOTTED	0.937	0.547	2	PLAIN
P251702	1 1/4-12UNF	SLOTTED	1.875	1.094	2	PLAIN
P251703	3/4-16 UNF	SLOTTED	1.125	0.625	2	PLAIN
P251706	1-14 UNS	SLOTTED	1.500	0.875	2	PLAIN
P251707	1 1/4-12UNF	HEX	1.875	1.063	2	PLAIN
P251708	1 1/8-12 UNF	SLOTTED	1.688	0.999	2	PLAIN
P251710	1 1/4-12UNF	JAM	1.875	0.750	–	–
P251711	1 3/4-12UN	SLOTTED	2.750	1.250	2	PLAIN
P251712	3/4-16 UNF	SLOTTED	1.125	0.422	5	PLAIN
P251714	1-14 UNS	SLOTTED	1.500	0.875	5	ZINC
P251715	7/8-14 UNF	SLOTTED	1.312	0.484	2	PLAIN
P251717	1 1/8-12 UNF	SLOTTED	1.688	0.999	5	PLAIN
P251719	1-14 UNS	SLOTTED	1.500	0.563	2	PLAIN
P251720	1 1/2-12 UNF	SLOTTED	2.187	1.250	2	PLAIN
P251721	7/8-14 UNF	SLOTTED	1.312	0.750	2	PLAIN
P251722	1 1/4-12UNF	SLOTTED	1.875	1.250	5	PLAIN
P251723	2-12 UN	SLOTTED	3.125	1.250	5	PLAIN
P251724	1 1/4-12UNF	JAM	1.875	0.751	2	PLAIN
P251725	1-14 UNS	12-SLOTTED	1.438	0.625	2	PLAIN
P251727	2-12 UN	SLOTTED	3.000	1.125	5	PLAIN
P251728	1 3/4-12UN	JAM	2.750	1.000	2	ZINC & YELLOW
P251729	1 3/4-12UN	JAM	2.750	0.875	2	ZINC & YELLOW
P251730	1 3/4-12UN	JAM	2.750	0.875	–	–
P251731	1 3/4-12UN	JAM	2.750	0.875	2	PLAIN
P251732	1 1/2-6 UNC	HEX	2.250	1.250	2	PLAIN
P251733	2-1/2-12 UN	SLOTTED	3.750	1.188	5	PLAIN
P251734	1-14 UNS	SLOTTED	1.500	0.875	5	PLAIN
P251735	1-14 UNS	SLOTTED	1.500	0.875	5	ZINC & YELLOW
P251736	5/8-18 UNF	SLOTTED	0.938	0.563	5	ZINC
P251737	7/8-14 UNF	SLOTTED	1.312	0.750	5	ZINC
P251738	1 3/8-12UNF	SLOTTED	2.000	0.781	2	PLAIN
P251739	1.173-18	BEARING	–	0.416	–	ZINC
P251740	1 1/4-12 UNF	JAM	1.875	0.750	5	ZINC
P251741	3.527-12	BEARING	4.656	0.698	–	ZINC
P251742	3-12 UN	JAM	4.625	1.763	5	ZINC
P251743	1 1/2-12 UNF	JAM	2.500	0.880	5	ZINC
P251744	3"-12 ANSF	BEARING	–	1.815	–	BLACK OXIDE
P251745	3/4-16 UNF	SLOTTED	1.125	0.665	5	ZINC & YELLOW
P251746	1 1/2-12 UNF	HEX	2.250	0.880	5	ZINC & YELLOW
P251747	1-14 UNS	SLOTTED	1.500	0.887	5	ZINC & YELLOW
P251748	1 1/8-12 UNF	SLOTTED	1.688	0.999	5	ZINC & YELLOW
P251749	2-12 UN	JAM	3.125	1.169	5	ZINC & YELLOW
P251750	130X12	BEARING	6.500	1.417	–	BLACK OXIDE
P251751	1 1/4-12 UNF	SLOTTED	1.875	1.094	5	PLAIN
P251752	2.548-18	BEARING	3.375	0.573	–	ZINC

Hex & Slotted Hex Nuts

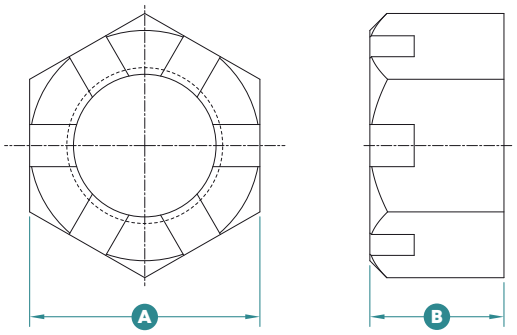

Bearing Lock Nuts

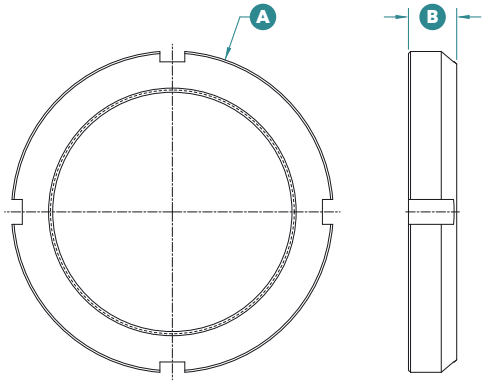

PART NO.	THREAD SIZE	STYLE	DIM A	DIM B	GRADE	FINISH
P251753	1 3/4-12UN	JAM	2.750	1.000	5	ZINC
P251754	1 1/2-12 UNF	JAM	2.500	0.880	5	BLACK OXIDE
P251755	1 1/2-12 UNF	JAM	2.500	0.880	5	BLACK OXIDE
P251756	1 1/2-12 UNF	JAM	2.250	0.880	2	PLAIN
P251757	1-14 UNS	SLOTTED	1.500	0.875	5	ZINC
P251758	1-14 UNS	SLOTTED	1.500	0.563	5	ZINC
P251759	5.106-12	BEARING	6.750	0.885	–	ZINC
P251760	1 1/2-12 UNF	SLOTTED	2.250	1.317	5	PLAIN
P251761	3-1/4"-12 UNF	BEARING	5.250	0.875	–	ZINC
P251762	1 1/2-12 UNF	BEARING	3.375	0.875	–	ZINC
P251763	2-5/8"-12 UNF	BEARING	4.200	0.858	–	ZINC
P251764	3/4-16 UNF	SLOTTED	1.125	0.665	5	ZINC
P251765	M42X1.5	12-SLOTTED	65	0.750	10	PLAIN
P251766	1 1/4-12 UNF	SLOTTED	1.875	0.751	5	PLAIN

Wheel Nuts

Wheel Nuts – Technical Information

PART NO.	STYLE	THREAD SIZE	DIM A	DIM B	DIM C	GRADE	PLATING
P201601	90°	5/8-18 UNF	0.938	0.688	90°	GRADE 2	ZINC PLATING
P201602	90°	1/2-20 UNF	0.813	0.625	90°	GRADE 5	ZINC PLATING
P201603	60°	1/2-20 UNF	0.813	0.625	60°	GRADE 2	ZINC PLATING
P201604	90°	9/16-18 UNF	1.00	0.688	90°	GRADE 2	ZINC PLATING
P201607	90°	5/8-18 UNF	1.06	0.844	90°	GRADE 5	ZINC PLATING
P201608	R.875	3/4-16 UNF	1.50	0.875	SR0.875	–	ZINC PLATING
P201612	FLANGE	3/4-16 UNF	1.13	0.656	1.500	GRADE 8	ZINC YELLOW PLATING
P201630	FLANGE	3/4-16 UNF	1.13	0.656	1.500	GRADE 5	ZINC PLATING
P201632	FLANGE	5/8-18 UNF	0.94	0.563	1.250	GRADE 5	ZINC PLATING
P201634	FLANGE	5/8-18 UNF	0.94	0.500	1.250	GRADE 5	ZINC PLATING
P201636	–	3/4-16 UNF	1.13	0.641	-	GRADE 8	ZINC YELLOW PLATING
P201638	–	1/2-20 UNF	0.75	0.438	-	GRADE 2	ZINC PLATING
P201647	90°	5/8-18 UNF	0.94	0.719	90°	GRADE 5	ZINC YELLOW PLATING
P201653	90°	9/16-18 UNF	1.00	0.688	90°	GRADE 5	ZINC YELLOW PLATING
P201655	2 PIECE	M22X1.5	1.28	1.188	1.797	CLASS 10	PTFE
P201669	90°	1/2-20 UNF	0.81	0.625	90°	GRADE 5	ZINC YELLOW PLATING
P201671	FLANGE	1/2-20 UNF	0.75	0.438	1.03	GRADE 5	ZINC PLATING
P201673	FLANGE	9/16-18 UNF	0.88	0.506	1.19	GRADE 8	ZINC PLATING
P201676	90°	5/8-18 UNF	1.06	0.844	90°	GRADE 5	ZINC YELLOW PLATING
P201677	2 PIECE	M20X1.5	30.00	27.000	45	–	TS-5A
P201678	FLANGE	3/4-16 UNF	1.13	0.656	1.50	GRADE 8	ZINC PLATING
P201681	FLANGE	M10X1.5	15.00	13.500	21.8	CLASS 10.9	ZINC PLATING
P201682	NYLOCK	M10X1.5	16.00	11.900	-	CLASS 10.9	ZINC PLATING
P201683	FLANGE	M8X1.25	13.00	8.000	17.9	CLASS 10.9	ZINC PLATING
P201689	2 PIECE	5/8-18 UNF	1.06	0.875	1.51	GRADE 8	PHOSPHATE
P201692	2 PIECE	3/4-16 UNF	1.50	0.875	1.827	GRADE 8	ZINC PLATING
P201702	60°	1/2-20 UNF	–	–	–	GRADE 5	ZINC PLATING
P201704	2 PIECE	M18X1.5	–	–	–	–	TEFLON

Lug Nut

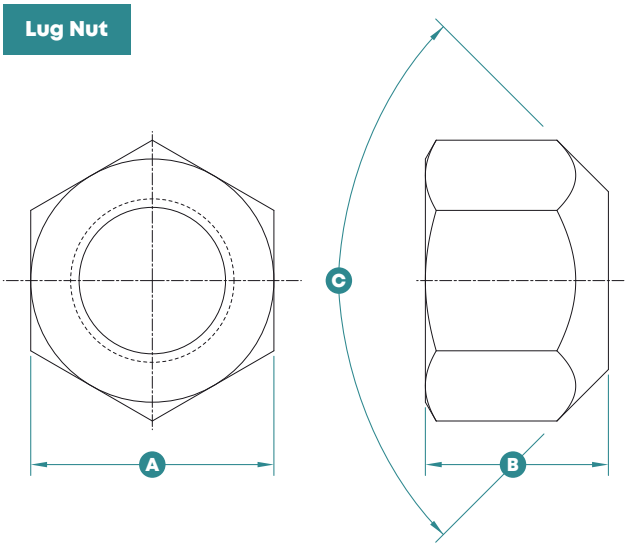

Flange Nut

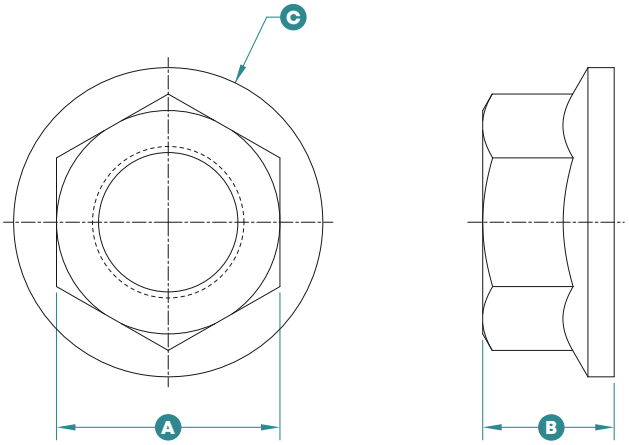

Budd Nut

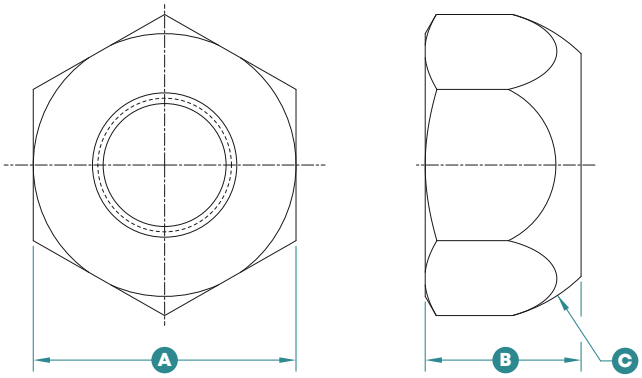

Hex Nut

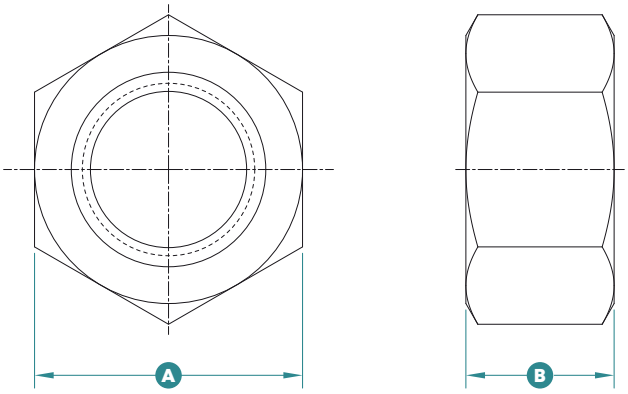

Spindle Washers

Spindle Washers – Technical Information

PART NO.	TYPE	DIM A	DIM B	DIM C	GRADE	HEAT TREAT	FINISH
P301801	TYPE A WASHER	1.312	0.656	0.095	1008-1010	–	PLAIN
P301802	TYPE A WASHER	1.469	0.812	0.134	1008-1010	–	PLAIN
P301803	HARDENED WASHER	2.000	0.812	0.149	1045	38-45 HRC	PLAIN
P301804	WASHER	2.000	0.937	0.164	1008-1033	–	PLAIN
P301805	TYPE A WASHER	2.000	1.062	0.134	1008-1010	–	PLAIN
P301806	HARDENED WASHER	2.130	1.062	0.250	1045-1050	38-45 HRC	PLAIN
P301807	WASHER	1.500	0.812	0.183	1008-1010	–	PLAIN
P301808	TYPE B WASHER	3.000	1.312	0.160	1008-1020	–	PLAIN
P301812	HARDENED WASHER	3.500	2.062	0.183	1008-1010	50-55 HRC	PLAIN
P301813	HARDENED WASHER	2.000	0.938	0.164	1008-1033	50-55 HRC	PLAIN
P301817	HARDENED WASHER	2.130	1.187	0.250	1045-1050	38-45 HRC	PLAIN
P301826	HARDENED TYPE A WASHER	2.000	0.812	0.148	HRS	38-45 HRC	PLAIN
P301827	WASHER	4.000	2.062	0.250	1008-1010	–	PLAIN
P301829	TYPE A WASHER	2.000	1.062	0.134	HRS	–	PLAIN
P301830	WASHER	2.125	1.062	0.250	HRS	–	PLAIN
P301832	WASHER	3.250	1.280	0.187	HRS	–	PLAIN
P301834	HARDENED WASHER	1.750	0.812	0.218	HRS	38-45 HRC	PLAIN
P301835	HARDENED WASHER	4.000	2.060	0.250	HRS	40 HRB MIN	PLAIN
P301837	TYPE A WASHER	2.500	1.062	0.165	–	–	LIGHT OILED
P301838	WASHER	3.375	1.875	0.250	1010	–	PLAIN
P301845	HARDENED WASHER	1.750	0.812	0.187	1010	55 HRC MIN	PLAIN
P301849	TYPE B WASHER	2.250	0.938	0.160	HRS	–	PLAIN
P301856	WASHER	3.000	1.620	0.250	A36-HRS	–	PLAIN
P301861	TONGUE WASHER	1.750	1.032	0.125	1020- HRPS	–	PLAIN
P301864	HARDENED WASHER	1.750	0.781	0.194	–	RA 78-81	PLAIN
P301865	HARDENED WASHER	2.330	1.062	0.250	38-45 RC	38-45 HRC	PLAIN
P301867	HARDENED WASHER	2.000	1.030	0.160	38-45 RC	38-45 HRC	PLAIN
P301868	HARDENED WASHER	2.063	1.031	0.183	79 RA MIN	RA 79 MIN	PLAIN
P301871	WASHER	4.500	2.625	0.250	–	–	PLAIN
P301872	WASHER	1.312	0.656	0.095	1008-1010	–	ZINC PLATING

Spindle Washer

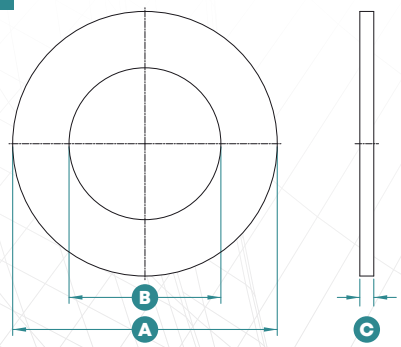

PART NO.	TYPE	DIM A	DIM B	DIM C	GRADE	HEAT TREAT	FINISH
P301873	TYPE A WASHER	1.469	0.812	0.134	HRS P60	–	ZINC PLATING
P301874	WASHER	2.625	1.625	0.105	ASTM A569	–	ZINC YELLOW PLATING
P301875	HARDENED WASHER	1.750	0.898	0.250	ASTM A325	38-45 HRC	PLAIN
P301876	LOCK WASHER	1.922	1.193	0.054	SEE PRINTS	–	PLAIN
P301877	D-FLAT WASHER	1.670	1.000	0.120	–	–	PLAIN
P301878	TANG WASHER	1.565	1.000	0.039	–	–	PLAIN
P301882	HARDENED WASHER	4.500	2.625	0.290	ASTM F436	38-45 HRC	PLAIN
P301883	WASHER	5.500	2.563	0.500	A36 HRS	–	PLAIN
P301884	TONGUE WASHER	4.500	3.030	0.188	DOMEX 100	–	ZINC PLATING
P301886	BENT WASHER	4.500	3.030	0.188	DOMEX 100	–	ZINC PLATING
P301887	WASHER	2.120	1.060	0.265	ASTM A36	–	PICKLED & OILED
P301888	HARDENED WASHER	1.750	0.906	0.120	1045	42-47 HRC	PLAIN
P301889	HARDENED WASHER	2.250	1.188	0.134	1045	45-53 HRC	ZINC PLATING
P301891	TONGUE WASHER	7.000	5.188	0.310	DOMEX 100	–	PLAIN
P301892	HARDENED WASHER	2.500	1.312	0.250	1045	38-45 HRC	ZINC PLATING
P301894	WASHER	0.630	0.335	0.063	–	–	ZINC PLATING
P301897	TONGUE WASHER	3.500	2.028	0.188	DOMEX 100	–	ZINC PLATING
P301898	BENT WASHER	3.500	2.028	0.188	DOMEX 100	–	ZINC PLATING
P301899	TONGUE WASHER	3.000	1.778	0.188	DOMEX 100	–	ZINC PLATING
P301900	BENT WASHER	3.000	1.778	0.188	DOMEX 100	–	ZINC PLATING
P301901	TONGUE WASHER	1.688	1.005	0.120	HRS	–	PLAIN
P301902	HARDENED WASHER	3.250	1.625	0.250	1045-1050	38-45 HRC	PLAIN
P301907	HARDENED WASHER	44MM	30MM	1.6MM	1045	38-45 HRC	PLAIN
P301910	HARDENED LOCK WASHER	5.250	3.268	0.125	1050	44-52 HRC	PLAIN
P301911	HARDENED LOCK WASHER	3.374	1.518	0.125	1050	44-52 HRC	PLAIN
P301912	TYPE B WASHER	1.750	1.062	0.100	1008-1010		PLAIN
P301913	HARDENED LOCK WASHER	4.200	2.625	0.125	1050	44-52 HRC	PLAIN
P301915	TYPE B WASHER	2.250	1.312	0.160	1008-1010	–	PLAIN
P301922	WASHER	2.750	1.063	0.250	–	–	ZINC YELLOW PLATING
P301923	WASHER	2.000	1.515	0.179	–	–	PLAIN

Lock Washers

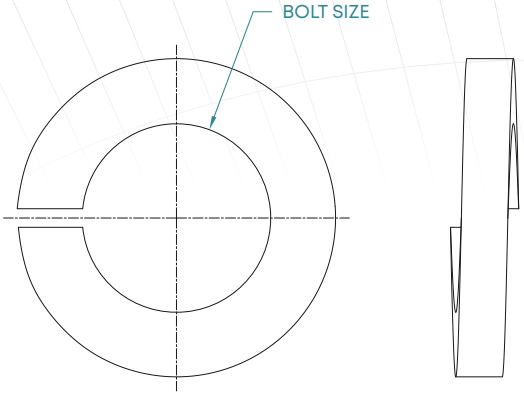

Lock Washer

Lock Washer – Technical Information

PART NO.	DESCRIPTION
P943401	1/2" HELICAL SPRING LOCK WASHER, ZINC PLATED (.875OD X .520ID X .135) ANSI – ASME B18:21.1 – 1990
P943402	3/8" LOCK WASHER, ZINC PLATED (GRADE 5)
P943403	5/8" LOCK WASHER, ZINC PLATED
P943407	WASHER (9158041) 1/2 SPLIT NO PLATI
P943408	WASHER LOCK ZINC PLATED 3/4
P943409	WASHER LOCK ZINC PLATED 5/8
P943410	WASHER RETAINING 3/4
P943411	WASHER LOCK ZINC PLATED 5/16
P943412	5/8 RETAINING CLIP
P943413	1" HELICAL LOCK WASHER, ZINC YELLOW PLATING
P943414	(OPEN)
P943415	WASHER LOCK ZINC PLATED 9/16 (9058131)
P943416	1/2" HELICAL SPRING LOCK WASHER, YELLOW ZINC PLATED
P943417	80MM INTERNAL RETAINING RING
P943418	50MM EXTERNAL RETAINING RING
P943419	35MM EXTERNAL RETAINING RING
P943420	72MM INTERNAL RETAINING RING
P943421	2.50" EXTERNAL RETAINING RING

PART NO.	DESCRIPTION
P943422	40MM INTERNAL RETAINING RING
P943423	65MM INTERNAL RETAINING RING
P943424	40MM INTERNAL RETAINING RING
P943425	68MM INTERNAL RETAINING RING
P943426	85MM INTERNAL RETAINING RING
P943427	39MM EXTERNAL RETAINING RING
P943428	68MM INTERNAL RETAINING RING
P943429	30MM EXTERNAL RETAINING RING
P943430	62MM INTERNAL RETAINING RING
P943431	63MM INTERNAL RETAINING RING

Grease Fittings

Gease Fittings – Technical Information

PART NO.	SIZE	ANGLE	THREAD FORM
P902803	1/4"	–	DRIVE
P902804	1/8-27 NPT	90°	SELF TAPPING
P902806	1/4"	65°	DRIVE
P902807	1/8-27 NPT	–	STRAIGHT
P902808	3/16"	–	DRIVE
P902809	3/16"	45°	DRIVE
P902810	1/4-28 UNF	45°	SELF TAPPING
P902812	1/8-27 NPT	45°	PIPE THREAD
P902813	1/4-28 UNF	–	SELF TAPPING
P902814	1/4-28 UNF	90°	SELF TAPPING
P902815	1/4-28 UNF	–	TAPERED
P902816	1/8-27 NPT	–	PIPE THREAD
P902817	1/4-28 UNF	–	SELF TAPPING
P902818	#6	–	ORB
P902819	1/8-28 BSPT	–	SELF TAPPING
P902820	1/8-27 NPT	–	PIPE THREAD
P902821	1/8-27 NPT	90°	SELF TAPPING
P902822	1/8-27 NPT	–	SELF TAPPING
P902823	1/4"	–	DRIVE

Zerk

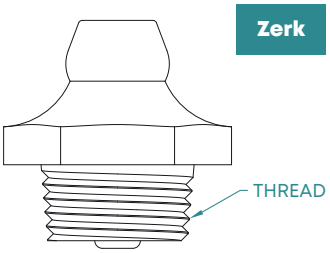

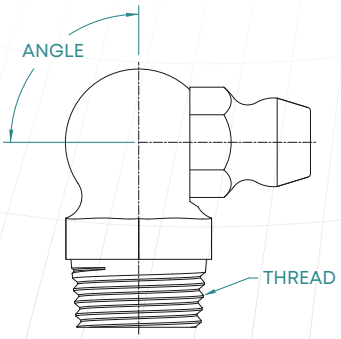

Warranty

Subject to the terms and conditions hereinafter set forth, moveero Inc. (moveero") warrants moveero products sold by moveero to be free from defects in material and workmanship under correct use, normal operating conditions and proper applications which shall include maintenance of products in accordance with moveero manuals and service bulletins, for a period of one year from the date of shipment by moveero

This warranty does not extend to products or parts damaged or subjected to accident, abuse, misuse or improper installation after shipment from our factory, nor to products or parts altered or repaired by anyone other than authorized moveero representatives.

Disclaimers

This limited warranty is the only warranty extended by moveero in connection with any sale by moveero to the original purchaser or manufacturer and does not extend to successive buyers, users, third parties or employees. THIS WARRANTY IS IN LIEU OF ALL OTHER WARRANTIES, EXPRESS OR IMPLIED, INCLUDING WARRANTIES OF MERCHANTABILITY OR FITNESS FOR A PARTICULAR PURPOSE, notwithstanding disclosure to moveero of the product's intended use. Any implied warranties to the extent exclusion is permitted by law shall be limited to the term of the express warranty set forth herein. An affirmation of fact or promise made on behalf of moveero shall not be deemed to create an express warranty that the product shall conform to the affirmation or promise; any description of the product is for the sole purpose of identifying them and shall not be deemed to create an express warranty that the product shall conform to such description; any sample or model is for illustrative purposes only and shall not be deemed to create an express warranty that the product shall conform to the sample or model; and no affirmation or promise, or description, or sample or model, shall be deemed part of the basis of the bargain.

Exclusive remedy

moveero's obligation upon breach of warranty shall be limited to replacing or repairing at our option, free of charge, but not including installation, dismantling, reassembling or any other charge, the particular product or part which inspection discloses to have been defective at time of shipment. Inspection shall be at our plant, transportation costs prepaid by customer. Written notice of such defect shall be given by the customer to moveero within ten (10) days after such defect(s) appear. Written permission for any warranty claim returned must be first obtained from authorized moveero representatives. All returns must be accompanied with a complete written explanation of claimed defects and the circumstances of operational failure. Replacement or repaired products or parts shall be warranted under the terms of this warranty for the remainder of the term of the original warranty or of a period of two (2) months after such repair or replacement, whichever is longer. Upon expiration of the warranty, all of moveero's obligations hereunder shall terminate.

In no event shall moveero have any liability for payment of any consequential, incidental, indirect, special or tort damages of any kind including, but not limited to, any loss of profits, to the extent exclusion is permitted by law. This warranty states our entire and exclusive liability and buyers exclusive remedy for any claim of damages in connection with the sales or furnishing of moveero's products or parts, their design, suitability for use, installations or operation, or for any claimed defect therein. Products not manufactured by moveero are furnished subject only to the manufacturer's warranties, if any, and without warranties, express or implied, by moveero.

As consideration for this warranty, the original customer and subsequent purchaser agree to indemnify and hold moveero, harmless from and against all and any loss, liability, damages or expenses for injury to persons or property, including without limitation, the original customer's and subsequent purchaser's employees and property, due to their acts or omissions or the acts or omissions of their agents, and employees in the installation, transportation, maintenance, use and operation of said equipment.

Terms and Conditions

Please refer to our website for details www.moveero.com.

moveero Headquarters

moveero Inc
PO Box 48, 5453 6th Avenue
Armstrong, Iowa 50514
USA

www.moveero.com

moveero Denmark

Nagbølvej 31
DK – 6640, Lunderskov
Denmark

moveero USA

PO Box 48, 5453 6th Avenue
Armstrong,Iowa 50514
USA

moveero USA

Test & Validation Center
2420 7th Ave S, Estherville, Iowa 51334-2786
USA

moveero Italy

moveero Global Innovation and R&D Center
Via Molino Emili 18, 25030 Maclodio (BS)
Italy

© moveero 2026 – 10/2026 v7